BOXABL

STUDIO CASITA
TWO DOOR
MODEL BXB-000009

REVISIONS				DRAWING INDEX	
00-00-00	10-06-23	09-13-23	08-17-23	Sheet Number	Sheet Title
	3	2		G1.0	COVER SHEET
	3			G2.0	ENERGY CALCS
				G2.1	ENERGY CALCS
				ARCHITECTURAL	
	3		1	A1.0	FLOOR PLAN
				A2.0	EXTERIOR ELEVATIONS
	3			A3.0	WALL SECTIONS
				MECHANICAL	
				M1.0	MECHANICAL NOTES, SYMBOLS, AND ABBREVIATIONS
			1	M2.0	MECHANICAL PLANS
				M3.0	MECHANICAL DETAILS
				ELECTRICAL	
				E1.0	SYMBOL LIST, GENERAL NOTES & SPECIFICATIONS
	3			E2.0	ELECTRICAL PLANS
				PLUMBING	
	3		1	P1.0	PLUMBING NOTES, SYMBOLS, AND ABBREVIATIONS
	3	2	1	P2.0	PLUMBING PLANS
	3	2		P3.0	PLUMBING DETAILS

BUILDING DATA

OCCUPANCY CLASSIFICATION: IRC ACCESSORY STRUCTURE OR DWELLING UNIT
TOTAL BUILDING AREA: 361 SQFT
BUILDING HEIGHT: 10'-9"
CONSTRUCTION TYPE: V-B (STRUCTURAL INSULATING PANELS) 2

APPLIED LOADS:
ROOF LIVE LOAD: 20 PSF
ROOF SNOW LOAD: 29 PSF
ROOF DEAD LOAD: 6 PSF (+ 16 PSF MAX. IF ROOF TRUSS IS USED)
FLOOR LIVE LOAD: 40 PSF
FLOOR DEAD LOAD: 5 PSF
ULT. WIND SPEED: 115 MPH, EXPOSURE: C
127 MPH, EXPOSURE: B
115 MPH, EXPOSURE: B (W/ TRUSS)

SEISMIC FACTORS:
I = 1 S_S = 0.674 S_1 = .222
SITE CLASS = D (ASSUMED)
S_{DS} = 0.567 S_{D1} = 0.325
SEISMIC DESIGN CATEGORY: D
BASIC SEISMIC FORCE RESISTING SYSTEM
= LIGHT FRAMED WALLS W/ SHEAR PANELS OF MGO AND STEEL
DESIGN BASE SHEAR =1,134 LB (ASD)
CS = .28 R = 6.5 PER ICC-ESR REPORT
ANALYSIS PROCEDURE: EQUIV. LATERAL FORCE 2

TESTS PASSED:
NFPA 286 CORNER BURN TEST
ASTM E84 NON-COMBUSTIBLE MATERIAL CONSTRUCTION
ICC EVALUATION REPORT ESR 4725

BUILDING INFORMATION

ADDRESS:

ADDRESS: 1234 STREET
CITY: CITY
COUNTY: COUNTY
STATE: ARIZONA

BUILDING CODE:

- BUILDING CODE: 2018 INTERNATIONAL RESIDENTIAL CODE
- MECHANICAL CODE: 2018 INTERNATIONAL MECHANICAL CODE
- ELECTRICAL CODE: 2017 NATIONAL ELECTRICAL CODE
- PLUMBING CODE: 2018 INTERNATIONAL PLUMBING CODE
- ENERGY CODE: 2018 INTERNATIONAL ENERGY CONSERVATION CODE
- FIRE PREVENTION CODE: 2018 INTERNATIONAL FIRE CODE

PROJECT CONTACTS

OWNER
BOXABL
5345 EAST NORTH BELT ROAD
LAS VEGAS, NV 89115

ARCHITECT
SEVAN DESIGN SOLUTIONS P.C.
3025 HIGHLAND PARKWAY, SUITE 850
DOWNERS GROVE, ILLINOIS
630-733-9647
JOE DEFILIPPIS

ELECTRICAL ENGINEER
DICKERSON ENGINEERING, INC
3343 NORTH RIDGE
ARLINGTON HEIGHTS, IL 60004
847-966-0290
DAVIS DICKERSON

MECHANICAL & PLUMBING ENGINEER
WCW ENGINEERS, INC.
760 CREEL DRIVE
WOOD DALE, IL 60191
630-595-8800
JOSEPH G. THOMAS

FIELD SCOPE OF WORK

- BOXABL UNITS ARE FABRICATED WITH A FLAT ROOF. IT IS THE RESPONSIBILITY OF THE OWNER/INSTALLER TO INSTALL A CODE APPROVED ROOF ON-SITE
- FOUNDATION SYSTEMS MAY BE REQUIRED BY YOUR LOCAL AHJ, SOME FOUNDATION DESIGNS ARE FOUND IN THIS PLAN SET, MORE CAN BE FOUND AT BOXABL.COM/FOUNDATIONS. IT IS THE OWNER'S RESPONSIBILITY TO HAVE AN APPROPRIATE FOUNDATION BUILT FOR THE SITE CONDITIONS
- THE OWNER IS RESPONSIBLE FOR CONNECTING BOXABL UNITS TO LOCAL UTILITIES. UTILITY CONNECTION SIZES & LOCATIONS CAN BE FOUND ON THE MEP SUBSEQUENT SHEETS.
- THE OWNER IS RESPONSIBLE FOR ERECTING THE BOXABL HINGED PANEL SYSTEM AND INTERLOCKING PANELS USING HARDWARE PROVIDED PER INSTALLATION INSTRUCTIONS SPECIFIC TO THEIR MODEL
- FINAL SHOWER INSTALLATION ON-SITE MAY BE REQUIRED SUCH AS PANEL INSTALLATION OR CAULKING. SEE SPECIFIC UNIT OWNERS MANUAL FOR DETAILS. 3
- THE OWNER IS RESPONSIBLE FOR THE INSTALLATION OF MISCELLANEOUS ITEMS WHICH MAY INCLUDE BUT ARE NOT LIMITED TO: THE BATHROOM MIRROR, BATHROOM DOOR, EXTERIOR LIGHT SCONCES, INTERIOR PENDANT LIGHT, SMOKE DETECTOR, REFRIGERATOR, WASHER DRYER UNIT, OVER THE FRIDGE CABINETRY & HIDE PANELS AND THE BREAKFAST BAR COUNTERTOP. 2

GENERAL NOTES

THE ARCHITECT AND HIS CONSULTANTS DO NOT WARRANTY OR GUARANTEE THE COMPLETENESS OF THE WORK BEYOND A REASONABLE DILIGENCE. IF ANY ERRORS, DISCREPANCIES, OR OMISSIONS ARE FOUND TO EXIST IN THE WORK PRODUCT, THE ARCHITECT SHALL BE PROMPTLY NOTIFIED SO THAT HE MAY HAVE THE OPPORTUNITY TO TAKE WHATEVER STEPS NECESSARY TO RESOLVE THE ISSUE. FAILURE TO PROMPTLY NOTIFY THE ARCHITECT OF SUCH CONDITIONS, SHALL ABSOLVE THE ARCHITECT FROM ANY RESPONSIBILITY OF SUCH FAILURE. ACTION TAKEN WITHOUT THE KNOWLEDGE AND CONSENT OF THE ARCHITECT, IN CONTRADICTION TO THE WORK PRODUCT, OR THE RECOMMENDATIONS OF THE ARCHITECT SHALL BECOME THE RESPONSIBILITY OF THE PARTIES RESPONSIBLE FOR TAKING SUCH ACTION.

THESE DRAWINGS WERE PREPARED BASED ON THE ASSUMPTION THAT ANY CONTRACTOR, SUBCONTRACTOR, SUPPLIER, OR VENDOR INVOLVED IN THE CONSTRUCTION OF THE WORK DESCRIBED HEREIN HAS EXPERIENCE IN THEIR RESPECTIVE AREAS OR DISCIPLINES THAT MAKE UP THE SCOPE OF THE PROJECT.

MANUFACTURERS COMPLIANCE CERTIFICATE CAN BE FOUND INSIDE THE ELECTRICAL SUB PANEL DOOR.

THESE UNITS ARE PREFABRICATED FACTORY BUILT BUILDINGS. PLUMBING, ELECTRICAL, & HVAC ARE PRE-INSTALLED, AND ARE CONNECTED TO INCOMING UTILITIES WHEN THE UNIT IS SET ON SITE. 2

FOUNDATION SYSTEM IS PERMITTED & INSTALLED SEPARATELY BY THE UNIT OWNER.

THIS SET IS INTENDED TO BE USED IN CONJUNCTION WITH THE MANUFACTURERS PANEL DRAWINGS AND STRUCTURAL DRAWINGS.

FACTORY SCOPE OF WORK

- ALL EXTERIOR AND INTERIOR WALLS, FLOORS AND ROOFS ARE PRE-BUILT IN THE FACTORY AND PRE-FINISHED. SOME TOUCH UP WORK MAY BE NECESSARY AT PANEL HINGE POINTS ON-SITE.
- ALL INTERIOR ELECTRICAL DEVICES ARE PRE-INSTALLED AND TESTED EXCEPT FOR SMOKE DETECTORS, INTERNAL PENDANT LIGHT, AND EXTERIOR SCONCE WHICH ARE PROVIDED BUT FIELD INSTALLED.
- ALL INTERIOR PLUMBING WATER LINES & DRAINS ARE FACTORY INSTALLED APART FROM THE REFRIGERATOR WATER LINE CONNECTION AND WASHER-DRYER INSTALLATION.
- ALL APPLIANCES EXCEPT FOR THE REFRIGERATOR AND WASHER-DRYER UNIT ARE PRE-INSTALLED. REFRIGERATOR AND WASHER-DRYER UNIT ARE INCLUDED BUT SITE-INSTALLED.
- OTHER MISCELLANEOUS COMPONENTS PER "CUSTOMER INSTALL KIT" ARE INCLUDED BUT MUST BE FIELD INSTALLED. THESE MAY INCLUDE BUT NOT BE LIMITED TO:
  - BREAKFAST BAR COUNTERTOP COMPONENTS
  - WASHER DRYER CABINET BOX
  - OVER THE REFRIGERATOR CABINET
  - MISC. ACCENT LIGHTING
  - SMOKE DETECTORS
  - INTERIOR AND EXTERIOR TRIM COMPONENTS

DATE:	REV:	DESCRIPTION:
8/17/23	1	PLAN REVIEW COMMENTS
9/13/23	2	OWNER CLARIFICATIONS
10/6/23	3	PLAN REVIEW REVISIONS

PROFESSIONAL SEAL

SHEET FORMAT: ARCH C
SHEET SCALE: 1:3
CREATED BY: MT
RELEASE DATE: 6/9/2023

MODEL: 2 DOOR CASITA (ARIZONA)
MODEL #: BXB-000009
SHEET: G1.0

BOXABL INC.
5345 EAST NORTH BELT ROAD
NORTH LAS VEGAS, NV 89115, USA
+1(702) 500-9000 HELLO@BOXABL.COM

PROPRIETARY AND CONFIDENTIAL
THE INFORMATION CONTAINED IN THIS DRAWING IS THE SOLE PROPERTY OF BOXABL INC. ANY REPRODUCTION IN PART OR AS A WHOLE WITHOUT THE WRITTEN PERMISSION OF BOXABL INC. IS PROHIBITED.

BOXABL

Generated by RES*check-Web* Software

Compliance Certificate

Project Boxabl AZ (2-Door)

Energy Code:	**2018 IECC**
Location:	**Pima County, Arizona**
Construction Type:	**Single-family**
Project Type:	**New Construction**
Orientation:	**Bldg. faces 180 deg. from North**
Conditioned Floor Area:	**324 ft2**
Glazing Area	**13%**
Climate Zone:	**2 (1999 HDD)**
Permit Date:	
Permit Number:	

Construction Site: Owner/Agent: Designer/Contractor:

Compliance: Passes using performance alternative

Compliance: **3.8% Better Than Code**

Slab-on-grade tradeoffs are no longer considered in the UA or performance compliance path in REScheck. Each slab-on-grade assembly in the specified climate zone must meet the minimum energy code insulation R-value and depth requirements.

Envelope Assemblies

Assembly	Gross Area or Perimeter	Cavity R-Value	Cont. R-Value	Prop. U-Factor	Req. U-Factor	Prop. UA	Req. UA
Ceiling: Other	324			0.042	0.030	14	10
Left Wall: Other Orientation: Left side	129			0.042	0.084	4	9
Rear Door: Solid Door (under 50% glazing) Orientation: Left side	24			0.150	0.400	4	10
Back Wall: Other Orientation: Back	153			0.042	0.084	6	11
3x4 Window: Vinyl Frame SHGC: 0.23 Orientation: Back	12			0.220	0.400	3	5
2x3 Window: Vinyl Frame SHGC: 0.23 Orientation: Back	6			0.220	0.400	1	2
Right Wall: Other Orientation: Right side	147			0.042	0.084	4	9
Entry Door: Solid Door (under 50% glazing) Orientation: Right side	24			0.150	0.400	4	10
3x6 Window C: Vinyl Frame SHGC: 0.21 Orientation: Right side	18			0.250	0.400	5	7
Front Wall: Other Orientation: Front	135			0.042	0.084	4	8
3x6 Window A: Vinyl Frame SHGC: 0.21 Orientation: Front	18			0.250	0.400	5	7
3x6 Window B: Vinyl Frame SHGC: 0.21 Orientation: Front	18			0.250	0.400	5	7
Voids: Structural Insulated Panels	16		0.0	0.326	0.064	5	1
Floor: Other	308			0.042	0.064	13	20

Generated by RES*check-Web* Software

Compliance Certificate

Project Boxabl AZ (2-Door)

Energy Code:	**2018 IECC**
Location:	**Coconino County, Arizona**
Construction Type:	**Single-family**
Project Type:	**New Construction**
Orientation:	**Bldg. faces 180 deg. from North**
Conditioned Floor Area:	**324 ft2**
Glazing Area	**13%**
Climate Zone:	**5 (6999 HDD)**
Permit Date:	
Permit Number:	

Construction Site: Owner/Agent: Designer/Contractor:

Compliance: Passes using performance alternative

Compliance: **2.4% Better Than Code**

Slab-on-grade tradeoffs are no longer considered in the UA or performance compliance path in REScheck. Each slab-on-grade assembly in the specified climate zone must meet the minimum energy code insulation R-value and depth requirements.

Envelope Assemblies

[*] ADDED 4" BLOWN IN CELLULOSE INSULATION 3

Assembly	Gross Area or Perimeter	Cavity R-Value	Cont. R-Value	Prop. U-Factor	Req. U-Factor	Prop. UA	Req. UA
Ceiling: Other	324			0.026*	0.026	8	8
Left Wall: Other Orientation: Left side	129			0.042	0.060	4	6
Rear Door: Solid Door (under 50% glazing) Orientation: Left side	24			0.150	0.300	4	7
Back Wall: Other Orientation: Back	153			0.042	0.060	6	8
3x4 Window: Vinyl Frame SHGC: 0.23 Orientation: Back	12			0.220	0.300	3	4
2x3 Window: Vinyl Frame SHGC: 0.23 Orientation: Back	6			0.220	0.300	1	2
Right Wall: Other Orientation: Right side	147			0.042	0.060	4	6
Entry Door: Solid Door (under 50% glazing) Orientation: Right side	24			0.150	0.300	4	7
3x6 Window C: Vinyl Frame SHGC: 0.21 Orientation: Right side	18			0.250	0.300	5	5
Front Wall: Other Orientation: Front	135			0.042	0.060	4	6
3x6 Window A: Vinyl Frame SHGC: 0.21 Orientation: Front	18			0.250	0.300	5	5
3x6 Window B: Vinyl Frame SHGC: 0.21 Orientation: Front	18			0.250	0.300	5	5
Voids: Structural Insulated Panels	16		0.0	0.326	0.033	5	1
Floor: Other	308			0.042	0.033	13	10

CALCULATIONS:

THESE VALUES WERE USED TO CREATE THE RESCHECK COMPLIANCE CERTIFICATE

WALL ASSEMBLY
OUTSIDE AIR FILM: 0.25
5.75" EPS WALL PANEL: 22.54 (ASSUMES R VALUE OF 3.92/INCH)
VARIES ANYWHERE FROM 3.5 TO 4.0
1/4" MGO BOARD: 0
INSIDE AIR FILM: 0.68

TOTAL FOR WALL ASSEMBLY: R= 23.47 U= 0.0426

FLOOR ASSEMBLY
OUTSIDE AIR FILM: 0.92
6.75" EPS WALL PANEL: 26.46 (ASSUMES R VALUE OF 3.92/INCH)
VARIES ANYWHERE FROM 3.5 TO 4.0
1/4" MGO BOARD: 0
INSIDE AIR FILM: 0.92

TOTAL FOR FLOOR ASSEMBLY: R= 28.3 U= 0.0354

ROOF ASSEMBLY
OUTSIDE AIR FILM: 0.61
6.75" EPS WALL PANEL: 26.46 (ASSUMES R VALUE OF 3.92/INCH)
VARIES ANYWHERE FROM 3.5 TO 4.0
1/4" MGO BOARD: 0
INSIDE AIR FILM: 0.61

TOTAL FOR ROOF ASSEMBLY: R= 27.68 U= 0.0362

NOTES:

- CLIMATE ZONE 5: ADD 4" BLOWN IN CELLULOSE INSULATION (R = 14.4) OR OTHER INSULATION OF EQUAL R VALUE
- ENVELOPE CALCULATIONS WERE DONE USING THE PERFORMANCE METHOD
- BASED ON OUR RESCHECK ANALYSIS, THE LOSS OF THERMAL EFFICIENCY DUE TO INTERNAL CHASES, AND OTHER VOIDS WERE NEGLIGIBLE, AND DID NOT HAVE A NEGATIVE EFFECT ON THE OVERALL THERMAL PERFORMANCE OF THE UNIT.
- R VALUES NOTED ABOVE (R 3.92/IN) ARE REFERENCED IN ICC EVALUATION REPORT ESR 1962, FOR EXPANDED POLYSTYRENE INSULATION. THIS INSULATION IS LISTED AS THE INSULATION USED IN THE IN ICC ES EVALUATION REPORT ESR 4725 FOR STRUCTURAL INSULATION PANELS.

3

DATE:	REV:	DESCRIPTION:
8/17/23	1	PLAN REVIEW COMMENTS
9/13/23	2	OWNER CLARIFICATIONS
10/6/23	3	PLAN REVIEW REVISIONS

PROFESSIONAL SEAL

SHEET FORMAT:	ARCH C
SHEET SCALE:	1:3
CREATED BY:	MT
RELEASE DATE:	6/9/2023

MODEL: 2 DOOR CASITA (ARIZONA)

MODEL #: BXB-000009

SHEET: G2.0

BOXABL INC.
5345 EAST NORTH BELT ROAD
NORTH LAS VEGAS, NV 89115, USA
+1(702) 500-9000 HELLO@BOXABL.COM

PROPRIETARY AND CONFIDENTIAL
THE INFORMATION CONTAINED IN THIS DRAWING IS THE SOLE PROPERTY OF BOXABL INC. ANY REPRODUCTION IN PART OR AS A WHOLE WITHOUT THE WRITTEN PERMISSION OF BOXABL INC. IS PROHIBITED.

BOXABL

RES*check* Software Version : REScheck-Web

Inspection Checklist

Energy Code: 2018 IECC

Requirements: 0.0% were addressed directly in the RES*check* software

Text in the "Comments/Assumptions" column is provided by the user in the REScheck Requirements screen. For each requirement, the user certifies that a code requirement will be met and how that is documented, or that an exception is being claimed. Where compliance is itemized in a separate table, a reference to that table is provided.

Section # & Req.ID	Pre-Inspection/Plan Review	Plans Verified Value	Field Verified Value	Complies?	Comments/Assumptions
103.1, 103.2 [PR1][1]	Construction drawings and documentation demonstrate energy code compliance for the building envelope. Thermal envelope represented on construction documents.			☐Complies ☐Does Not ☐Not Observable ☐Not Applicable	
103.1, 103.2, 403.7 [PR3][1]	Construction drawings and documentation demonstrate energy code compliance for lighting and mechanical systems. Systems serving multiple dwelling units must demonstrate compliance with the IECC Commercial Provisions.			☐Complies ☐Does Not ☐Not Observable ☐Not Applicable	
302.1, 403.7 [PR2][2]	Heating and cooling equipment is sized per ACCA Manual S based on loads calculated per ACCA Manual J or other methods approved by the code official.	Heating: Btu/hr____ Cooling: Btu/hr____	Heating: Btu/hr____ Cooling: Btu/hr____	☐Complies ☐Does Not ☐Not Observable ☐Not Applicable	

Section # & Req.ID	Foundation Inspection	Complies?	Comments/Assumptions
303.2.1 [FO11][2]	A protective covering is installed to protect exposed exterior insulation and extends a minimum of 6 in. below grade.	☐Complies ☐Does Not ☐Not Observable ☐Not Applicable	
403.9 [FO12][2]	Snow- and ice-melting system controls installed.	☐Complies ☐Does Not ☐Not Observable ☐Not Applicable	

Section # & Req.ID	Final Inspection Provisions	Plans Verified Value	Field Verified Value	Complies?	Comments/Assumptions
402.1.1, 402.2.1, 402.2.2, 402.2.6 [FI1][1]	Ceiling insulation R-value.	R-____ ☐ Wood ☐ Steel	R-____ ☐ Wood ☐ Steel	☐Complies ☐Does Not ☐Not Observable ☐Not Applicable	*See the Envelope Assemblies table for values.*
303.1.1.1, 303.2 [FI2][1]	Ceiling insulation installed per manufacturer's instructions. Blown insulation marked every 300 ft².			☐Complies ☐Does Not ☐Not Observable ☐Not Applicable	
402.2.3 [FI22][2]	Vented attics with air permeable insulation include baffle adjacent to soffit and eave vents that extends over insulation.			☐Complies ☐Does Not ☐Not Observable ☐Not Applicable	
402.4.1.2 [FI17][1]	Blower door test @ 50 Pa. <=5 ach in Climate Zones 1-2, and <=3 ach in Climate Zones 3-8.	ACH 50 =____	ACH 50 =____	☐Complies ☐Does Not ☐Not Observable ☐Not Applicable	
403.3.3 [FI27][1]	Ducts are pressure tested to determine air leakage with either: Rough-in test: Total leakage measured with a pressure differential of 0.1 inch w.g. across the system including the manufacturer's air handler enclosure if installed at time of test. Postconstruction test: Total leakage measured with a pressure differential of 0.1 inch w.g. across the entire system including the manufacturer's air handler enclosure.	____ cfm/100 ft²	____ cfm/100 ft²	☐Complies ☐Does Not ☐Not Observable ☐Not Applicable	
403.3.4 [FI14][1]	Duct tightness test result of <=4 cfm/100 ft2 across the system or <=3 cfm/100 ft2 without air handler @ 25 Pa. For rough-in tests, verification may need to occur during Framing Inspection.	____ cfm/100 ft²	____ cfm/100 ft²	☐Complies ☐Does Not ☐Not Observable ☐Not Applicable	
403.3.2.1 [FI24][1]	Air handler leakage designated by manufacturer at <=2% of design air flow.			☐Complies ☐Does Not ☐Not Observable ☐Not Applicable	
403.1.1 [FI9][2]	Programmable thermostats installed for control of primary heating and cooling systems and initially set by manufacturer to code specifications.			☐Complies ☐Does Not ☐Not Observable ☐Not Applicable	
403.1.2 [FI10][2]	Heat pump thermostat installed on heat pumps.			☐Complies ☐Does Not ☐Not Observable ☐Not Applicable	
403.5.1 [FI11][2]	Circulating service hot water systems have automatic or accessible manual controls.			☐Complies ☐Does Not ☐Not Observable ☐Not Applicable	
403.6.1 [FI25][2]	All mechanical ventilation system fans not part of tested and listed HVAC equipment meet efficacy and air flow limits per Table R403.6.1.			☐Complies ☐Does Not ☐Not Observable ☐Not Applicable	

Section # & Req.ID	Framing / Rough-In Inspection	Plans Verified Value	Field Verified Value	Complies?	Comments/Assumptions
402.1.1, 402.3.4 [FR1][1]	Door U-factor.	U-____	U-____	☐Complies ☐Does Not ☐Not Observable ☐Not Applicable	*See the Envelope Assemblies table for values.*
402.1.1, 402.3.1, 402.3.3, 402.5 [FR2][1]	Glazing U-factor (area-weighted average).	U-____	U-____	☐Complies ☐Does Not ☐Not Observable ☐Not Applicable	*See the Envelope Assemblies table for values.*
303.1.3 [FR4][1]	U-factors of fenestration products are determined in accordance with the NFRC test procedure or taken from the default table.			☐Complies ☐Does Not ☐Not Observable ☐Not Applicable	
402.4.1.1 [FR23][1]	Air barrier and thermal barrier installed per manufacturer's instructions.			☐Complies ☐Does Not ☐Not Observable ☐Not Applicable	
402.4.3 [FR20][1]	Fenestration that is not site built is listed and labeled as meeting AAMA /WDMA/CSA 101/I.S.2/A440 or has infiltration rates per NFRC 400 that do not exceed code limits.			☐Complies ☐Does Not ☐Not Observable ☐Not Applicable	
402.4.5 [FR16][2]	IC-rated recessed lighting fixtures sealed at housing/interior finish and labeled to indicate ≤2.0 cfm leakage at 75 Pa.			☐Complies ☐Does Not ☐Not Observable ☐Not Applicable	
405.2 [FR25][1]	All ducts in unconditioned spaces or outside the building envelope are insulated to ≥R-6.	R-____	R-____	☐Complies ☐Does Not ☐Not Observable ☐Not Applicable	
403.3.5 [FR15][2]	Building cavities are not used as ducts or plenums.			☐Complies ☐Does Not ☐Not Observable ☐Not Applicable	
403.4 [FR17][2]	HVAC piping conveying fluids above 105 °F or chilled fluids below 55 °F are insulated to ≥R-3.	R-____	R-____	☐Complies ☐Does Not ☐Not Observable ☐Not Applicable	
403.4.1 [FR24][1]	Protection of insulation on HVAC piping.			☐Complies ☐Does Not ☐Not Observable ☐Not Applicable	
403.6 [FR19][2]	Automatic or gravity dampers are installed on all outdoor air intakes and exhausts.			☐Complies ☐Does Not ☐Not Observable ☐Not Applicable	

Section # & Req.ID	Final Inspection Provisions	Plans Verified Value	Field Verified Value	Complies?	Comments/Assumptions
403.2 [FI26][2]	Hot water boilers supplying heat through one- or two-pipe heating systems have outdoor setback control to lower boiler water temperature based on outdoor temperature.			☐Complies ☐Does Not ☐Not Observable ☐Not Applicable	
403.5.1.1 [FI28][2]	Heated water circulation systems have a circulation pump. The system return pipe is a dedicated return pipe or a cold water supply pipe. Gravity and thermos-syphon circulation systems are not present. Controls for circulating hot water system pumps start the pump with signal for hot water demand within the occupancy. Controls automatically turn off the pump when water is in circulation loop is at set-point temperature and no demand for hot water exists.			☐Complies ☐Does Not ☐Not Observable ☐Not Applicable	
403.5.1.2 [FI29][2]	Electric heat trace systems comply with IEEE 515.1 or UL 515. Controls automatically adjust the energy input to the heat tracing to maintain the desired water temperature in the piping.			☐Complies ☐Does Not ☐Not Observable ☐Not Applicable	
403.5.2 [FI30][2]	Demand recirculation water systems have controls that manage operation of the pump and limit the temperature of the water entering the cold water piping to <= 104°F.			☐Complies ☐Does Not ☐Not Observable ☐Not Applicable	
403.5.4 [FI31][2]	Drain water heat recovery units tested in accordance with CSA B55.1. Potable water-side pressure loss of drain water heat recovery units < 3 psi for individual units connected to one or two showers. Potable water-side pressure loss of drain water heat recovery units < 2 psi for individual units connected to three or more showers.			☐Complies ☐Does Not ☐Not Observable ☐Not Applicable	
404.1 [FI6][1]	90% or more of permanent fixtures have high efficacy lamps.			☐Complies ☐Does Not ☐Not Observable ☐Not Applicable	
404.1.1 [FI23][2]	Fuel gas lighting systems have no continuous pilot light.			☐Complies ☐Does Not ☐Not Observable ☐Not Applicable	
401.3 [FI7][2]	Compliance certificate posted.			☐Complies ☐Does Not ☐Not Observable ☐Not Applicable	
303.3 [FI18][2]	Manufacturer manuals for mechanical and water heating systems have been provided.			☐Complies ☐Does Not ☐Not Observable ☐Not Applicable	

Additional Comments/Assumptions:

Section # & Req.ID	Insulation Inspection	Plans Verified Value	Field Verified Value	Complies?	Comments/Assumptions
303.1 [IN13][2]	All installed insulation is labeled or the installed R-values provided.			☐Complies ☐Does Not ☐Not Observable ☐Not Applicable	
402.1.1, 402.2.6 [IN1][1]	Floor insulation R-value.	R-____ ☐ Wood ☐ Steel	R-____ ☐ Wood ☐ Steel	☐Complies ☐Does Not ☐Not Observable ☐Not Applicable	*See the Envelope Assemblies table for values.*
303.2, 402.2.8 [IN2][1]	Floor insulation installed per manufacturer's instructions and in substantial contact with the underside of the subfloor, or floor framing cavity insulation is in contact with the top side of sheathing, or continuous insulation is installed on the underside of floor framing and extends from the bottom to the top of all perimeter floor framing members.			☐Complies ☐Does Not ☐Not Observable ☐Not Applicable	
402.1.1, 402.2.5, 402.2.6 [IN3][1]	Wall insulation R-value. If this is a mass wall with at least ½ of the wall insulation on the wall exterior, the exterior insulation requirement applies (FR10).	R-____ ☐ Wood ☐ Mass ☐ Steel	R-____ ☐ Wood ☐ Mass ☐ Steel	☐Complies ☐Does Not ☐Not Observable ☐Not Applicable	*See the Envelope Assemblies table for values.*
303.2 [IN4][1]	Wall insulation is installed per manufacturer's instructions.			☐Complies ☐Does Not ☐Not Observable ☐Not Applicable	

DATE:	REV:	DESCRIPTION:
8/17/23	1	PLAN REVIEW COMMENTS
9/13/23	2	OWNER CLARIFICATIONS
10/6/23	3	PLAN REVIEW REVISIONS

PROFESSIONAL SEAL

SHEET FORMAT:	ARCH C
SHEET SCALE:	1:3
CREATED BY:	MT
RELEASE DATE:	6/9/2023

MODEL: 2 DOOR CASITA (ARIZONA)

MODEL #: BXB-000009

SHEET: G2.1

BOXABL INC.
5345 EAST NORTH BELT ROAD
NORTH LAS VEGAS, NV 89115, USA
+1(702) 500-9000 HELLO@BOXABL.COM

PROPRIETARY AND CONFIDENTIAL
THE INFORMATION CONTAINED IN THIS DRAWING IS THE SOLE PROPERTY OF BOXABL INC. ANY REPRODUCTION IN PART OR AS A WHOLE WITHOUT THE WRITTEN PERMISSION OF BOXABL INC. IS PROHIBITED.

BOXABL

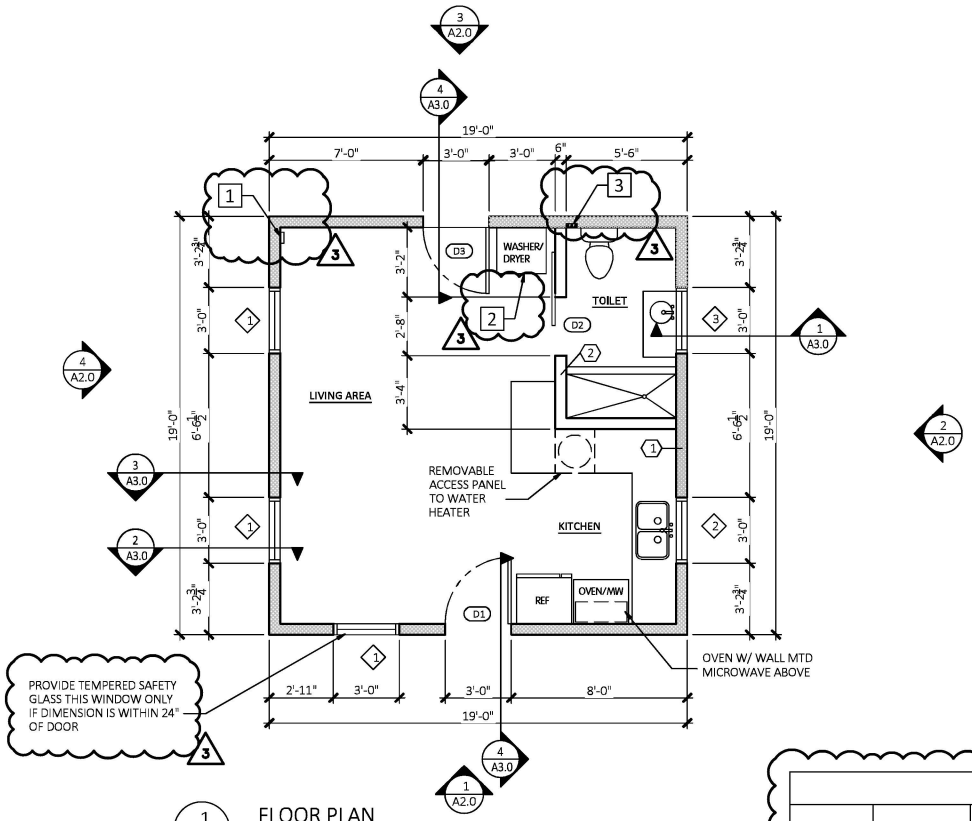

1 A1.0 FLOOR PLAN
SCALE: 1/4" = 1'-0"

LEGEND

- KEY NOTE
- SIP PANEL
- EXISTING WALL
- WINDOW TAG SEE A1.0
- WALL TYPE TAG. SEE A3.0
- DOOR TAG SEE A1.0

KEY NOTES

1. WALL MOUNTED SMOKE DETECTOR 20' AWAY FROM COOKING APPLIANCES
2. VENTLESS WASHER/DRYER
3. WASHER OUTLET BOX. RUN HOSES THRU PARTITIONS TO CONNECT TO WASHER DRYER

NOTES

- SEE MANUFACTURER'S DRAWINGS FOR UTILITY CONNECTIONS, PANEL DETAILS, MODULAR CONNECTIONS & ALL RELATED STRUCTURAL DETAILS
- FINAL DIMENSIONS ARE WITHIN ±1" OF DIMENSIONS SHOWN BASED ON MANUFACTURING TOLERANCES

WINDOW & DOOR SCHEDULE

NUMBER	PRODUCT	CONFIGURATION	SIZE	MATERIAL	U-FACTOR	SOLAR HEAT GAIN (SHGC)	DPI	NOTES
1	WINDOW	SINGLE HUNG	3'-0" X 6'-0"	VINYL	0.25	0.21	+20/-20	
2	WINDOW	FIXED	3'-0" X 4'-0"	VINYL	0.22	0.23	+20/-20	
3	WINDOW	FIXED	3'-0" X 2'-0"	VINYL	0.22	0.23	+20/-20	
D1	DOOR	ENTRY DOOR	3'-0" X 8'-0"	FIBERGLASS	0.15	0	+55/-60	
D2	DOOR	TOILET DOOR	2'-8" X 8'-0"	BARN DOOR	0	0	0	BARN-STYLE SLIDER
D3	DOOR	REAR DOOR	3'-0 X 8'-0"	FIBERGLASS	0.15	0	+55/-60	

DATE:	REV:	DESCRIPTION:
8/17/23	1	PLAN REVIEW COMMENTS
9/13/23	2	OWNER CLARIFICATIONS
10/6/23	3	PLAN REVIEW REVISIONS

PROFESSIONAL SEAL

SHEET FORMAT:	ARCH C
SHEET SCALE:	1:3
CREATED BY:	MT
RELEASE DATE:	6/9/2023

MODEL: 2 DOOR CASITA (ARIZONA)

MODEL #: BXB-000009

SHEET: A1.0

BOXABL INC.
5345 EAST NORTH BELT ROAD
NORTH LAS VEGAS, NV 89115, USA
+1(702) 500-9000 HELLO@BOXABL.COM

PROPRIETARY AND CONFIDENTIAL
THE INFORMATION CONTAINED IN THIS DRAWING IS THE SOLE PROPERTY OF BOXABL INC. ANY REPRODUCTION IN PART OR AS A WHOLE WITHOUT THE WRITTEN PERMISSION OF BOXABL INC. IS PROHIBITED.

BOXABL

EXTERIOR FINISHES:
24 GAUGE METAL PANEL INSTALLED BY MANUFACTURER

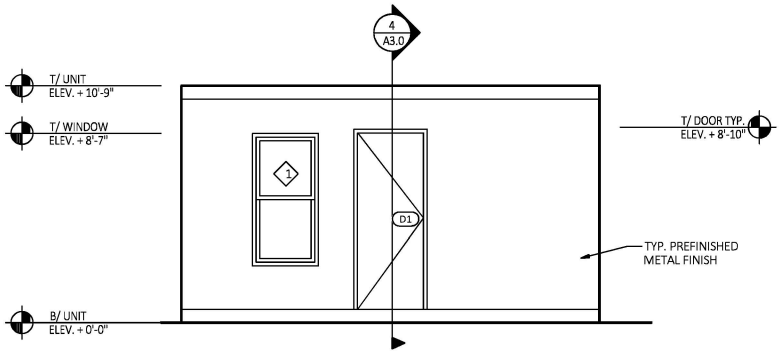

1 A2.0 FRONT SIDE
SCALE: 1/4" = 1'-0"

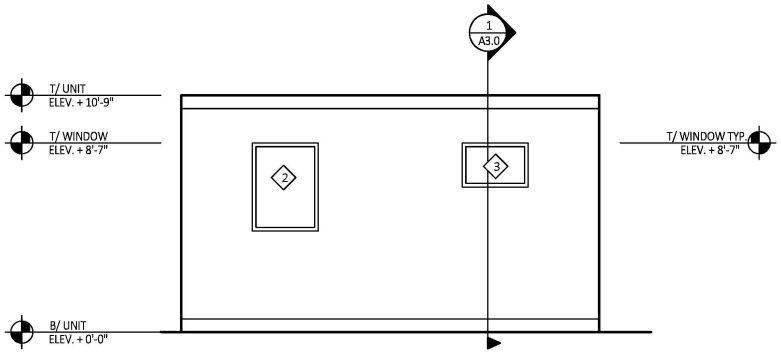

2 A2.0 RIGHT SIDE
SCALE: 1/4" = 1'-0"

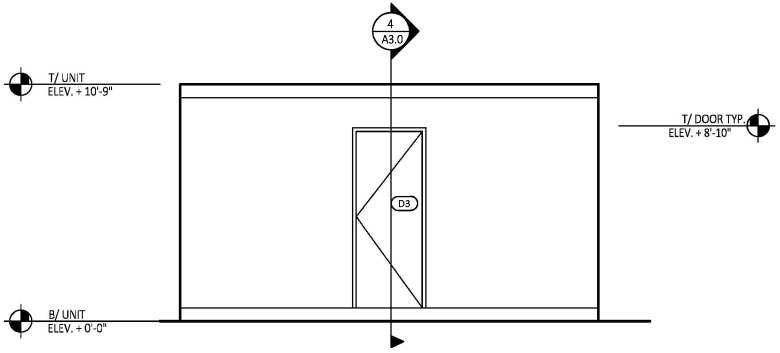

3 A2.0 BACK SIDE
SCALE: 1/4" = 1'-0"

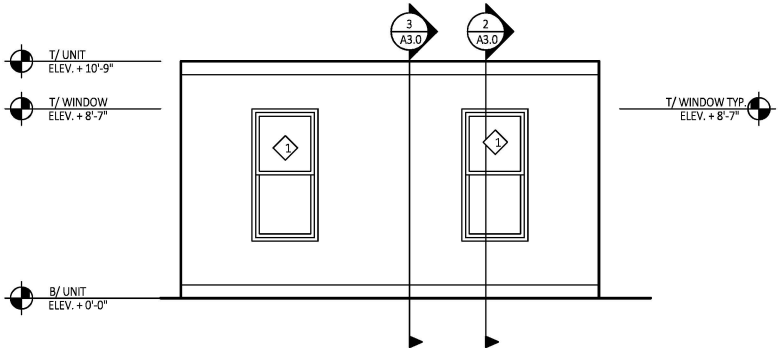

4 A2.0 LEFT SIDE
SCALE: 1/4" = 1'-0"

DATE:	REV:	DESCRIPTION:
8/17/23	1	PLAN REVIEW COMMENTS
9/13/23	2	OWNER CLARIFICATIONS
10/6/23	3	PLAN REVIEW REVISIONS

PROFESSIONAL SEAL

SHEET FORMAT:	ARCH C
SHEET SCALE:	1:3
CREATED BY:	MT
RELEASE DATE:	6/9/2023

MODEL: 2 DOOR CASITA (ARIZONA)

MODEL #: BXB-000009

SHEET: A2.0

BOXABL INC.
5345 EAST NORTH BELT ROAD
NORTH LAS VEGAS, NV 89115, USA
+1(702) 500-9000 HELLO@BOXABL.COM

PROPRIETARY AND CONFIDENTIAL
THE INFORMATION CONTAINED IN THIS DRAWING IS THE SOLE PROPERTY OF BOXABL INC. ANY REPRODUCTION IN PART OR AS A WHOLE WITHOUT THE WRITTEN PERMISSION OF BOXABL INC. IS PROHIBITED.

BOXABL

TYPICAL ROOF COVERING (PITCHED ROOF):
SLOPED ROOF TRUSS KIT & ROOF COVERING (ASPHALT SHINGLES, CLAY TILES, ETC.) TO BE PURCHASED SEPERATELY BY THE UNIT OWNER

TYPICAL ROOF COVERING (FLAT ROOF):
GAF TPO FULLY ADHERED SINGLE PLY MEMBRANE OR APPROVED ADHERE EPDM ROOFING MEMBRANE WITH ALL REQUIRED FLASHINGS, AND ACCESSORIES REQUIRED FOR A COMPLETE AND WATERTIGHT INSTALLATION

3

STANDARD WALL CONSTRUCTION TYPES

TYPICAL STRUCTURAL INSULATED WALL PANEL
1/4" MgO BOARD ADHERED TO 5 3/4" EPS FOAM INSULATION W/ 24 GAUGE METAL PANEL AS OUTSIDE FINISH.

TYPICAL STRUCTURAL INSULATED ROOF PANEL
1/4" MgO BOARD ADHERED TO 6 3/4" EPS FOAM INSULATION W/ TPO ROOFING MEMBRANE AS OUTSIDE FINISH.

TYPICAL STRUCTURAL INSULATED FLOOR PANEL
1/4" MgO BOARD ADHERED TO 6 3/4" EPS FOAM INSULATION W/ 24 GAUGE METAL PANEL AS OUTSIDE FINISH.

3

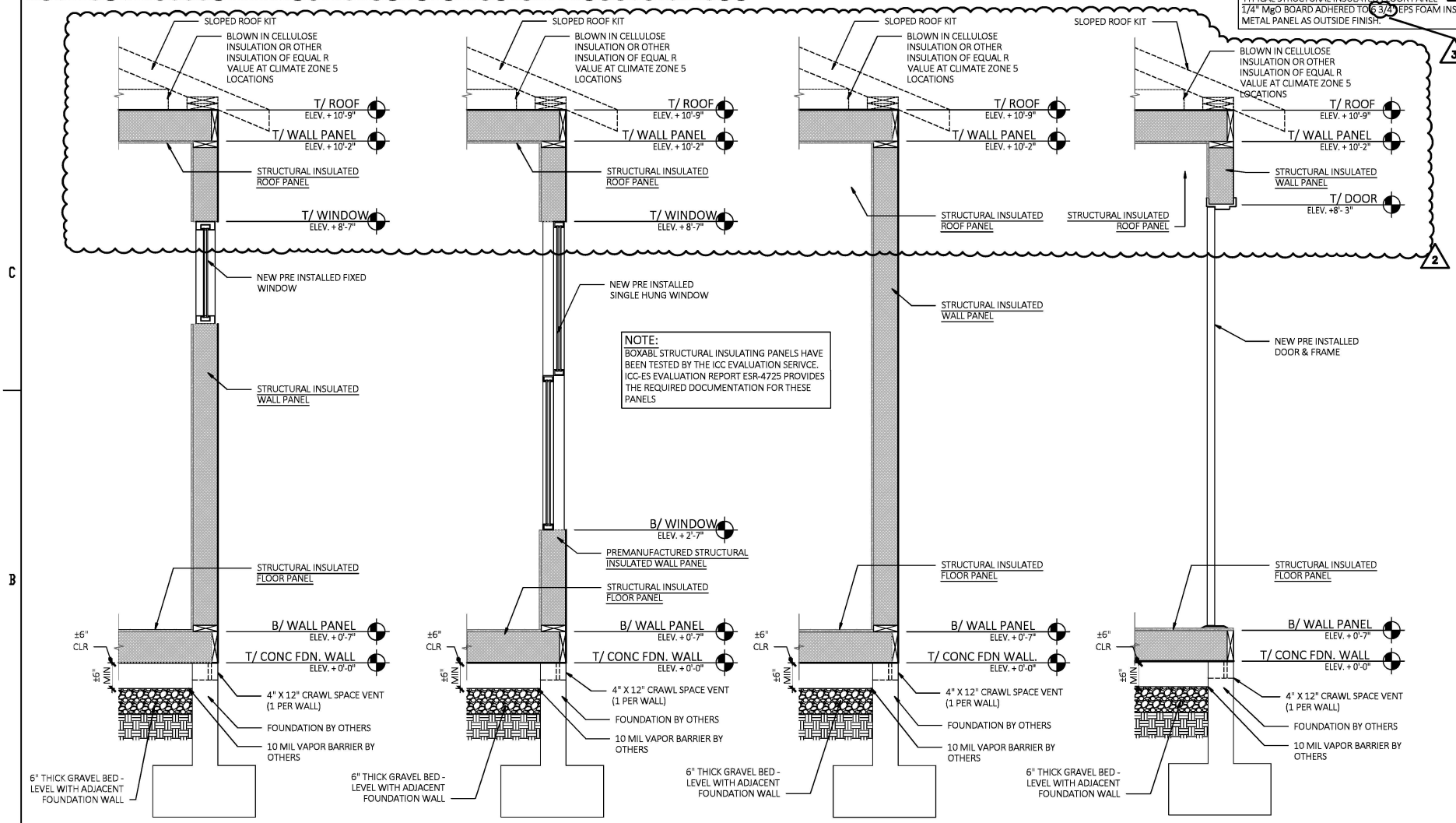

NOTE:
BOXABL STRUCTURAL INSULATING PANELS HAVE BEEN TESTED BY THE ICC EVALUATION SERIVCE. ICC-ES EVALUATION REPORT ESR-4725 PROVIDES THE REQUIRED DOCUMENTATION FOR THESE PANELS

1 A3.0 WALL SECTION
SCALE: 3/4" = 1'-0"

2 A3.0 WALL SECTION
SCALE: 3/4" = 1'-0"

3 A3.0 WALL SECTION
SCALE: 3/4" = 1'-0"

4 A3.0 WALL SECTION
SCALE: 3/4" = 1'-0"

DATE:	REV:	DESCRIPTION:
8/17/23	1	PLAN REVIEW COMMENTS
9/13/23	2	OWNER CLARIFICATIONS
10/6/23	3	PLAN REVIEW REVISIONS

PROFESSIONAL SEAL

SHEET FORMAT:	ARCH C
SHEET SCALE:	1:3
CREATED BY:	MT
RELEASE DATE:	6/9/2023

MODEL: 2 DOOR CASITA (ARIZONA)

MODEL #: BXB-000009

SHEET: A3.0

BOXABL INC.
5345 EAST NORTH BELT ROAD
NORTH LAS VEGAS, NV 89115, USA
+1(702) 500-9000 HELLO@BOXABL.COM

PROPRIETARY AND CONFIDENTIAL
THE INFORMATION CONTAINED IN THIS DRAWING IS THE SOLE PROPERTY OF BOXABL INC. ANY REPRODUCTION IN PART OR AS A WHOLE WITHOUT THE WRITTEN PERMISSION OF BOXABL INC. IS PROHIBITED.

BOXABL

GENERAL

1. MECHANICAL SYSTEMS SHALL BE INSTALL IN ACCORDANCE WITH ALL APPLICABLE BUILDING CODES.

2. DRAWINGS FOR MECHANICAL WORK ARE DIAGRAMMATIC, SHOWING THE GENERAL LOCATION, TYPE, LAYOUT AND EQUIPMENT REQUIRED. THE DRAWINGS SHALL NOT BE SCALED FOR EXACT MEASUREMENTS. REFER TO MANUFACTURERS STANDARD INSTALLATION DRAWINGS FOR EQUIPMENT CONNECTIONS AND INSTALLATION REQUIREMENTS AS REQUIRED. FURNISH AND INSTALL DUCTWORK, CONNECTIONS, ACCESSORIES, OFFSETS AND MATERIALS NECESSARY TO FACILITATE THE SYSTEMS FUNCTIONING AS INDICATED BY THE DESIGN AND THE EQUIPMENT INDICATED. THE WORK SHALL BE IN ACCORDANCE WITH LOCAL CODES AND ORDINANCES AND SUBJECT TO INSPECTION.

3. THE MECHANICAL SYSTEMS SHALL BE COMPLETE WITH ALL NECESSARY APPURTENANCES FOR A COMPLETE OPERATING SYSTEM.

4. THE CONTRACTOR SHALL WARRANTEE ALL MATERIAL AND GUARANTEE ALL WORKMANSHIP FOR ONE YEAR FROM SUBSTANTIAL COMPLETION.

BASIC MATERIALS AND METHODS

1. MATERIALS SHALL BEAR UNDERWRITERS LABEL WHERE SUCH STANDARDS HAVE BEEN ESTABLISHED AND LISTED BY UNDERWRITER'S LABORATORIES, INC. MATERIALS, EQUIPMENT AND APPLIANCES SHALL CONFORM TO THE LATEST STANDARDS OF:
   - AMCA -AIR MOVING AND CONDITIONING ASSOCIATIONS, INC.
   - SMACNA -SHEET METAL AND AIR CONDITIONING CONTRACTOR NATIONAL ASSOCIATION, INC.
   - ASHRAE -AMERICAN SOCIETY OF HEATING, REFRIGERATION AND AIR CONDITIONING ENGINEERS
   - ASME -AMERICAN SOCIETY OF MECHANICAL ENGINEERS
   - ASTM -AMERICAN SOCIETY FOR TESTING MATERIALS
   - NEMA -NATIONAL ELECTRICAL MANUFACTURER'S ASSOCIATION
   - ARI -AIR CONDITIONING AND REFRIGERATION INSTITUTE
   - ANSI -AMERICAN NATIONAL STANDARDS INSTITUTE

COORDINATION

1. COORDINATE WITH GENERAL CONTRACTOR FOR ALLOWABLE DAYS OF WEEK AND TIMES OF DAY FOR SYSTEMS SHUT DOWNS AS REQUIRED FOR THE CONSTRUCTION WORK.

2. THE MECHANICAL CONTRACTOR SHALL COORDINATE DUCTWORK INSTALLATION WITH ARCHITECTS/OWNERS REPRESENTATIVE IN FIELD AND OTHER TRADES.

3. THE MECHANICAL CONTRACTOR SHALL COORDINATE VOLTAGE OF ALL EQUIPMENT WITH ELECTRICAL PRIOR TO ORDERING EQUIPMENT.

INSTALLATION

1. CORE-DRILL OR SAW-CUT FLOOR, WALL, ROOF, ETC. AS REQUIRED FOR PIPING OR DUCTWORK AND FIRE-STOP OPENING AROUND PIPE OR DUCTWORK. VERIFY LOCATION OF STRUCTURAL BEAMS, JOISTS, ETC. BEFORE DRILLING OR CUTTING. NOTIFY ARCHITECT OF ANY DISCREPANCIES.

2. WHEREVER FOUNDATION WALLS, OUTSIDE WALLS, ROOFS, ETC. ARE CUT FOR INSTALLATION OF SYSTEMS, THEY SHALL BE PATCHED TO MATCH EXISTING CONSTRUCTION AND SEALED WEATHER-TIGHT. WORK SHALL BE PERFORMED BY CRAFTSMEN SKILLED IN THEIR RESPECTIVE TRADES.

3. ALL PIPING THAT IS EXPOSED TO VIEW SHALL BE ROUTED AS HIGH AS POSSIBLE AND TIGHT TO THE UNDERSIDE OF THE STRUCTURAL ABOVE.

4. ALL OUTSIDE AIR INTAKES SHALL BE A MINIMUM OF 10'-0" AWAY FROM EXHAUST DISCHARGE OPENINGS AND PLUMBING VENT STACKS.

EQUIPMENT

1. THE MECHANICAL CONTRACTOR SHALL INSTALL MECHANICAL SYSTEMS AS SHOWN, NOTED AND SPECIFIED. EQUIPMENT MAY NOT BE SUBSTITUTED UNLESS WRITTEN APPROVAL BY THE ARCHITECT, ENGINEER OR OWNER'S REPRESENTATIVE IS OBTAINED. ANY CHANGES TO THE DUCTWORK LAYOUT WILL NECESSITATE SUBMISSION OF SHEET METAL SHOP DRAWINGS FOR ENGINEER'S REVIEW. ANY UNAUTHORIZED CHANGES WILL BE REMOVED AT CONTRACTOR'S EXPENSE, IF DEEMED NECESSARY BY ARCHITECT, ENGINEER, OR OWNER'S REPRESENTATIVE.

2. UPON SELECTION OF THE MECHANICAL APPLIANCES, SUBMIT THE MANUFACTURER'S INSTALLATION INSTRUCTIONS TO THE BUILDING DEPARTMENT, INCLUDING LISTING FOR OUTSIDE INSTALLATION WHERE APPLICABLE.

AIR DISTRIBUTION

1. ALL DUCTWORK SHALL BE FABRICATED ACCORDING TO THE SMACNA LOW VELOCITY DUCT MANUAL, ASHRAE HANDBOOK VOLUME "HVAC SYSTEMS AND EQUIPMENT", AND TYPICAL DUCTWORK DETAILS SHOWN IN THESE DRAWINGS. ALL ELBOWS SHALL HAVE PROPER RADIUS. SIZES SHOW ON PLAN ARE INSIDE FREE AREA.

2. ALL FLEXIBLE DUCTWORK SHALL FACTORY ASSEMBLED CLASS 1 AIR DUCT (UL 181) WITH FIBERGLASS INSULATION AND REINFORCED OUTER PROTECTIVE COVER/VAPOR BARRIER. FLEX DUCT SHALL MEET NFPA 90A WITH FLAME SPREAD UNDER 25, SMOKE DEVELOPED UNDER 50, AND SHALL BE RATED FOR 2" W.C. PRESSURE AND 0 TO 250 DEGREE TEMPERATURE. MAXIMUM STRETCHED OUT LENGTH SHALL BE AS PER CODES.

3. PROVIDE UL APPROVED FIRE DAMPERS FOR ALL PENETRATIONS THROUGH FIRE RATED WALLS, PARTITIONS, CEILINGS, AND FLOORS. INSTALL FIRE DAMPERS AS PER MANUFACTURER'S DIRECTIONS AND PER UL GUIDELINES. PROVIDE ACCESS AS REQUIRED FOR SERVICING OF FIRE DAMPERS.

4. ALL CONTRACTOR FABRICATED AND MANUFACTURER FABRICATED COMPONENTS OF THE OUTSIDE AIR, SUPPLY AIR, RETURN AIR AND EXHAUST SYSTEMS SHALL BE CONSTRUCTED AND INSTALLED AIR-TIGHT. THE INSTALLED SYSTEMS SHALL BE PRESSURE TESTED AS SPECIFIED. PIPE OPENINGS IN SYSTEM COMPONENTS SHALL HAVE SHEET METAL BAFFLES, SET IN SEALANT, TO PREVENT LEAKAGE.

AUTOMATIC TEMPERATURE CONTROLS

1. CONTRACTOR SHALL FURNISH AND INSTALL ALL CONTROL WIRING AS REQUIRED. THERMOSTATS SHALL BE AS SPECIFIED OR AS FURNISHED WITH THE EQUIPMENT. PROVIDE TRANSFORMERS AS REQUIRED.

TESTING AND BALANCING

1. BALANCING CONTRACTOR SHALL BALANCE SYSTEMS TO AIR QUANTITIES SHOWN ON PLAN. BALANCING CONTRACTOR SHALL USE DUCT MOUNTED MANUAL DAMPERS FOR AIR SYSTEM BALANCING. USE OF A TERMINAL DAMPER IS NOT ACCEPTABLE.
2. TESTING AND BALANCING CONTRACTOR SHALL TEST ALL HVAC EQUIPMENT TO ENSURE PROPER OPERATION, TEST ALL CONTROLS TO ENSURE PROPER OPERATION, CALIBRATION AND ADJUSTMENT OF CONTROLS, AND TEST ECONOMIZERS TO ENSURE PROPER OPERATION.

3. THE ARCHITECT AND/OR OWNER'S REPRESENTATIVE SHALL BE NOTIFIED 48 HOURS OR MORE PRIOR TO FINAL TESTING AND BALANCING WORK SO THAT THEY AND/OR THE ENGINEER MAY BE PRESENT TO OBSERVE THIS WORK. THE BALANCING CONTRACTOR SHALL SUBMIT WRITTEN REPORTS OF ALL AIR FLOW READINGS, STATIC PRESSURES, GPM RATES, PRESSURE READINGS, TEMPERATURE READINGS, MOTOR AMPERAGE, ETC., TO DOCUMENT PROPERLY OPERATING AND BALANCED MECHANICAL SYSTEMS IN ALL AREAS. A COPY OF THE TEST AND BALANCE REPORT SHALL BE SUBMITTED TO THE AUTHORITIES HAVING JURISDICTION PRIOR TO FINAL INSPECTION AND REQUESTING OCCUPANCY.

CLOSEOUT DOCUMENTATION

1. THE CONTRACTOR SHALL FURNISH TO THE BUILDING OWNER WITHIN 90 DAYS OF DATE OF RECEIPT OF THE CERTIFICATE OF OCCUPANCY THE FOLLOWING;
   - A. OPERATING AND MAINTENANCE MANUAL. MANUAL SHALL CONSIST OF MANUFACTURER'S RECOMMENDATIONS, PROGRAMMING PROCEDURES AND DATA POINTS, NARRATIVE AND OTHER MEANS OF ILLUSTRATING TO THE OWNER HOW THE BUILDING, EQUIPMENT AND SYSTEMS ARE INTENDED TO BE INSTALLED, MAINTAINED AND OPERATED.
   - B. AS-BUILT HVAC DRAWINGS.
   - C. BALANCE REPORT OF HVAC SYSTEMS.

MECHANICAL ABBREVIATIONS

A.D.	ACCESS DOOR
A.F.F.	ABOVE FINISHED FLOOR
ACCU	AIR COOLED CONDENSING UNIT
CC	COOLING COIL
CV	CONTROL VALVE
EF	EXHAUST AIR FAN
F.C.U	FAN COIL UNIT
N.T.S.	NOT TO SCALE
S.C.D.	SEE CONSTRUCTION DRAWINGS
S.S.	STAINLESS STEEL
T	THERMOSTAT
U.N.O.	UNLESS NOTED OTHERWISE
ARCH	ARCHITECT OR ARCHITECTURAL
BLD'G	BUILDING
BOT.	BOTTOM
CL'G.	CEILING
CONC.	CONCRETE
DET.	DETAIL
DN.	DOWN
DWG.	DRAWING
E.A.T.	ENTERING AIR TEMPERATURE
GA.	GAUGE
H/AC	HEATING AND AIR CONDITIONING
L.A.T.	LEAVING AIR TEMPERATURE
MT'D	MOUNTED
S.S.T.	SATURATED SUCTION TEMPERATURE
T.S.P.	TOTAL STATIC PRESSURE
W/	WITH
Ø	DIAMETER/ROUND
0'-0"	ELEVATION FROM FINISH FLOOR

MECHANICAL SYMBOLS

T DEVICE	THERMOSTAT WITH DEVICE CONTROLLED.
CD	CONDENSATE DRAINAGE PIPING
L	REFRIGERANT LIQUID PIPING
S	REFRIGERANT SUCTION PIPING
	LINE SIZE GATE VALVE
	LINE SIZE BALL VALVE (2" & SMALLER) OR LINE SIZE BUTTERFLY VALVE (2-1/2" & LARGER)
	LINE SIZE BALANCING VALVE
	LINE SIZE CHECK VALVE
	LINE SIZE UNION

DATE:	REV:	DESCRIPTION:
8/17/23	1	PLAN REVIEW COMMENTS
9/13/23	2	OWNER CLARIFICATIONS
10/6/23	3	PLAN REVIEW REVISIONS

PROFESSIONAL SEAL

SHEET FORMAT:	ARCH C
SHEET SCALE:	1:3
CREATED BY:	MT
RELEASE DATE:	6/9/2023

MODEL: 2 DOOR CASITA (ARIZONA)

MODEL #: BXB-000009

SHEET: M1.0

BOXABL INC.
5345 EAST NORTH BELT ROAD
NORTH LAS VEGAS, NV 89115, USA
+1(702) 500-9000 HELLO@BOXABL.COM

PROPRIETARY AND CONFIDENTIAL
THE INFORMATION CONTAINED IN THIS DRAWING IS THE SOLE PROPERTY OF BOXABL INC. ANY REPRODUCTION IN PART OR AS A WHOLE WITHOUT THE WRITTEN PERMISSION OF BOXABL INC. IS PROHIBITED.

BOXABL

PLAN NOTES

1	NEW CONDENSING UNIT, CU-1. PROVIDE CONCRETE PAD TO HAVE THE CONDENSING UNIT ON A LEVEL SURFACE. COORDINATE EXACT LOCATION WITH ARCHITECT AND BUILDING OWNER.
2	CONNECT CONDENSATE DRAIN FROM FCU-1 TO DRAIN LINE BELOW KITCHEN SINK.
3	THERMOSTAT (PROVIDED WITH UNIT).
4	REFRIGERANT PIPING TO BE RUN ON INSIDE FACE OF WALL PANELS. PIPING WILL BE HIDDEN FROM VIEW WITH REMOVABLE COVER PIECES.
5	PROVIDE HOODED WALL CAP.
6	INTAKE FOR WHOLE HOUSE VENTILATION SYSTEM. VENT-US MODEL PS-101.

WHOLE HOUSE VENTILATION SYSTEM SHALL BE COMPRISED OF TOILET EXHAUST FAN, 70 CFM AND INTAKE LOUVER. VENTILATION RATE OF 20 CFM IS BASED ON EQUATION 15-1 USING 361 SQUARE FEET AND ONE BEDROOM. PER THESE CAPACITIES THE TOILET EXHAUST FAN WILL OPERATE 29% OF EACH 4 HOUR SEGMENT.

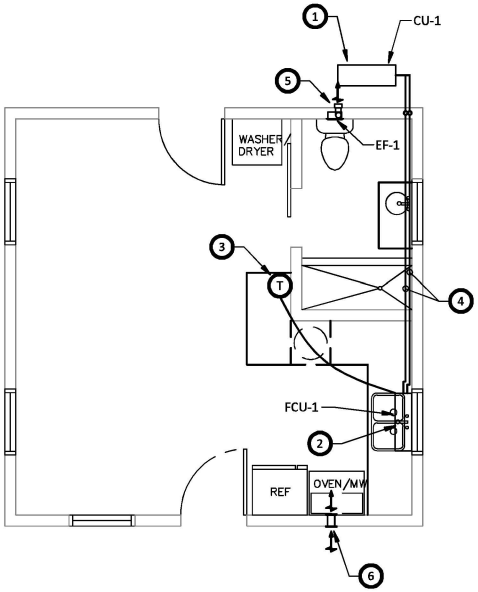

1 MECHANICAL PLAN
1/4" = 1'-0"

DATE:	REV:	DESCRIPTION:
8/17/23	1	PLAN REVIEW COMMENTS
9/13/23	2	OWNER CLARIFICATIONS
10/6/23	3	PLAN REVIEW REVISIONS

PROFESSIONAL SEAL

SHEET FORMAT:	ARCH C
SHEET SCALE:	1:3
CREATED BY:	MT
RELEASE DATE:	6/9/2023

MODEL: 2 DOOR CASITA (ARIZONA)

MODEL #: BXB-000009

SHEET: M2.0

BOXABL INC.
5345 EAST NORTH BELT ROAD
NORTH LAS VEGAS, NV 89115, USA
+1(702) 500-9000 HELLO@BOXABL.COM

PROPRIETARY AND CONFIDENTIAL
THE INFORMATION CONTAINED IN THIS DRAWING IS THE SOLE PROPERTY OF BOXABL INC. ANY REPRODUCTION IN PART OR AS A WHOLE WITHOUT THE WRITTEN PERMISSION OF BOXABL INC. IS PROHIBITED.

BOXABL

FAN COIL UNIT SCHEDULE

DESIG'N.	MFG'R.	MODEL NO.	AIR QUANTITY (CFM)	COOLING					HEATING			ELECTRICAL				COMPRESSOR	TYPE OF MOUNTING	HSPF	SEER	REMARKS
				E.A.T. DB °F/WB °F	L.A.T. DB °F/WB °F	TOTAL CAPACITY (BTU/HR)	REFRIGERANT	REFRIGERANT CHARGE	E.A.T. (°F)	L.A.T. (°F)	TOTAL CAPACITY @ 47°F	VOLTAGE	PHASE (Ø)	MCA	MOCP					
CU-1	MITSUBISHI	MUZ-WR12NA										230	1	10	15	ROTORY INVERTER	ON GRADE			
	LG	LSU120HFV3										230	1	10	15					
FCU-1	MITSUBISHI	MSZ-WR12NA	400	75.0/62.3	55.0/53.4	12,000	R410A	1 LB 12 OZ	60.0	88.2	12,200						WALL HUNG	8.50	16.00	
	LG	LSN120HFV3	459															9.00	17.00	

NOTE: UNITS TO BE MANUFACTURER BY MITSUBISHI, LG OR AN APPROVED EQUIVALENT UNIT.

EXHAUST FAN SCHEDULE

DESIG'N	SERVICE	MFG'R	MODEL NO.	TYPE	CFM	STATIC PRESSURE ("W.C.)	DRIVE	ELECTRICAL			BACKDRAFT DAMPER	OPER. WEIGHT (LBS.)	REMARKS
								H.P. (WATTS)	PHASE (Ø)	VOLTAGE			
EF-1	RESTROOM	ADDVENT	ABF 70	WALL	70	0.250	DIRECT	(60)	1	115	GRAVITY	8	
		DELTA	SLM 70					(11.5)					

NOTE: UNITS TO BE MANUFACTURED BY ADDVENT, DELTA, OR AN APPROVED EQUIVALENT UNIT.

MUZ-WR09NA MUZ-WR12NA

Unit: Inch (mm)

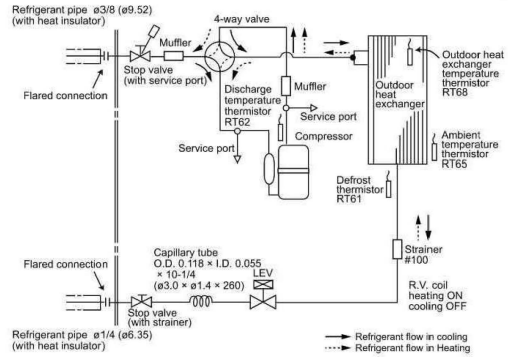

REFRIGERATION PIPING SYSTEM SCHEMATIC DETAIL

NOT TO SCALE

DATE:	REV:	DESCRIPTION:
8/17/23	1	PLAN REVIEW COMMENTS
9/13/23	2	OWNER CLARIFICATIONS
10/6/23	3	PLAN REVIEW REVISIONS

PROFESSIONAL SEAL

SHEET FORMAT:	ARCH C
SHEET SCALE:	1:3
CREATED BY:	MT
RELEASE DATE:	6/9/2023

MODEL: 2 DOOR CASITA (ARIZONA)

MODEL #: BXB-000009

SHEET: M3.0

BOXABL INC.
5345 EAST NORTH BELT ROAD
NORTH LAS VEGAS, NV 89115, USA
+1(702) 500-9000 HELLO@BOXABL.COM

PROPRIETARY AND CONFIDENTIAL
THE INFORMATION CONTAINED IN THIS DRAWING IS THE SOLE PROPERTY OF BOXABL INC. ANY REPRODUCTION IN PART OR AS A WHOLE WITHOUT THE WRITTEN PERMISSION OF BOXABL INC. IS PROHIBITED.

BOXABL

GENERAL

1. ALL WORK SHALL BE IN ACCORDANCE WITH ALL AUTHORITIES HAVING JURSIDICTION AND SUBJECT TO INSPECTION.

2. HOOK-UP CHARGES, PERMITS AND ALL OTHER EXPENSES RELATED TO A COMPLETE AND FUNCTIONING PLUMBING SYSTEM ARE INCLUDED AS PART OF THE PLUMBING WORK.

3. ALL AUTHORITIES HAVING JURISDICTION SHALL BE NOTIFIED AT LEAST THREE WORKING DAYS PRIOR TO COMMENCEMENT OF WORK.

4. THE WORK INCLUDED PROVIDING THE PLUMBING SYSTEM AND PROVIDING NEW MATERIALS, FITTINGS AND ACCESSORIES NECESSARY FOR A COMPLETE FUNCTIONING PLUMBING SYSTEM.

5. THE INTENT OF THE DRAWINGS IS TO INDICATE THE GENERAL EXTENT OF WORK REQUIRED FOR THE PROJECT. THE DRAWINGS FOR PLUMBING WORK ARE DIAGRAMMATIC, SHOWING THE GENERAL LOCATION, TYPE, FIXTURE AND EQUIPMENT REQUIRED. THE DRAWINGS SHALL NOT BE SCALED FOR EXACT MEASUREMENTS. REFER TO MANUFACTURER'S STANDARD ROUGH-IN DRAWINGS FOR PLUMBING FIXTURES FOR EXACT LOCATIONS.

BASIC MATERIALS AND METHODS

1. MATERIALS SHALL BEAR UNDERWRITER LABEL WHERE SUCH STANDARDS HAVE BEEN ESTABLISHED AND LISTED BY UNDERWRITER LABORATORIES, INC. MATERIALS, EQUIPMENT AND APPLIANCES SHALL CONFORM TO THE LATEST STANDARDS OF:
   ANSI -AMERICAN NATIONAL STANDARDS INSTITUTE
   ASHRAE -AMERICAN SOCIETY OF HEATING, REFRIGERATION AND AIR CONDITIONING ENGINEERS
   ASME -AMERICAN SOCIETY OF MECHANICAL ENGINEERS
   ASTM -AMERICAN SOCIETY FOR TESTING ENGINEERS
   NEMA NATIONAL ELECTRICAL MANUFACTURER'S ASSOCIATION

COORDINATION

1. COORDINATE WITH THE WORK OF OTHER TRADES.

2. REFER TO ARCHITECTURAL DRAWINGS OR CONSULT ARCHITECT FOR EXACT LOCATION OF FIXTURES, EQUIPMENT, ETC., AND FINAL FINISHED ELEVATIONS PRIOR TO ANY INSTALLATION WORK.

3. COORDINATE WITH GENERAL CONTRACTOR WHO SHALL CONSULT WITH THE OWNER FOR ALLOWABLE DAYS THAT WORK CAN BE PERFORMED AND TO SCHEDULE SYSTEM SHUT DOWNS AS REQUIRED FOR RELOCATION OF RISERS, ETC.

INSTALLATION - GENERAL

1. LISTED AND APPROVED THROUGH PENETRATION SYSTEM SHALL BE USED ON ALL PLUMBING PENETRATIONS OF FIRE RATED ASSEMBLIES.

2. EXPOSED PIPING IN FINISHED AREA SHALL BE WITH CHROME PLATED ESCUTCHEON AT PIPE ENTRY TO FINISHED AREA.

3. ALL PIPING SHALL BE CONCEALED IN CABINETS AND FIXED FURNISHINGS UNLESS OTHERWISE INDICATED.

4. CUT AND PATCH EXISTING FLOOR, WALL OR CEILING CONSTRUCTION AS REQUIRED FOR THE INSTALLATION WORK.

5. SLEEVE OR CORE-DRILL FLOOR SLABS, WALLS, ETC. AS REQUIRED FOR PIPING AND FIRE STOP OPENING AROUND PIPE. VERIFY LOCATION OF STRUCTURAL BEAMS, JOIST, ETC. BEFORE DRILLING.

6. WHEREVER FOUNDATION WALLS, OUTSIDE WALLS, ROOF, ETC. ARE PENETRATED FOR INSTALLATION OF SYSTEMS, THEY SHALL BE PATCHED TO MATCH EXISTING CONSTRUCTION AND SEALED WEATHER TIGHT. WORK SHALL BE PERFORMED BY CRAFTSMAN SKILLED IN THEIR RESPECTIVE TRADES.

7. ALL PIPING SHALL BE RUN PARALLEL TO BUILDING LINES AND SUPPORTED AND ANCHORED AS REQUIRED TO FACILITATE EXPANSION AND CONTRACTION. ALL PIPING SHALL BE CONCEALED EXCEPT IN UNFINISHED SPACES. INSTALL AS REQUIRED TO MEET ALL CONSTRUCTION CONDITIONS AND TO ALLOW FOR INSTALLATION OF OTHER WORK INCLUDING DUCTS AND ELECTRICAL CONDUIT. AT ALL CONNECTIONS BETWEEN FERROUS PIPING AND NONFERROUS PIPING, PROVIDE AN ISOLATING DIELECTRIC UNION.

8. PROVIDE ALL FITTINGS, ACCESSORIES, OFFSETS AND MATERIALS NECESSARY TO FACILITATE THE PLUMBING SYSTEMS FUNCTIONING AS INDICATED BY THE DESIGN AND THE EQUIPMENT INDICATED.

9. PIPING ROUTED IN EXTERIOR WALLS SHALL BE ROUTED ON THE INTERIOR SIDE OF BUILDING WALL INSULATION.

10. ACCESS PANELS SHALL BE PROVIDED WHERE CONCEALED CONTROL DEVICES, VALVES, CLEANOUTS, ETC. ARE CONCEALED WITHIN CEILINGS AND WALLS. WHERE ACCESS FOR ADJUSTMENT AND MAINTENANCE IS POSSIBLE THRU LAY-IN SUSPENDED CEILINGS, ACCESS PANELS ARE NOT REQUIRED.

11. THOROUGHLY CLEAN ITEMS BEFORE INSTALLATION, CAP PIPE OPENINGS TO EXCLUDE DIRT UNTIL FIXTURES ARE INSTALLED AND FINAL CONNECTIONS HAVE BEEN MADE. SET FIXTURES LEVEL AND IN PROPER ALIGNMENT. INSTALL SUPPLIES IN PROPER ALIGNMENT WITH FIXTURES. INSTALL SILICONE SEALANT BETWEEN FIXTURES AND ADJACENT MATERIAL FOR SANITARY JOINT.

DOMESTIC WATER PIPING

1. PROVIDE PRESSURE REDUCING VALVE ON PLUMBING SYSTEMS WHERE THE INCOMING WATER SERVICE PRESSURE IS IN EXCESS OF 80 PSI.

2. HOT AND COLD WATER PIPING SHALL BE PEX TUBING. PROVIDE WATER HAMMER ARRESTORS PER DRAWINGS.

3. PROVIDE ISOLATION VALVES FOR EACH BRANCH OFF MAIN SUPPLY.

4. SHUT-OFF VALVES WITH UNIONS SHALL BE PROVIDED FOR SERVICE TO EACH PLUMBING FIXTURE OR OTHER EQUIPMENT ITEM TO FACILITATE ISOLATION FOR REPAIR OR REPLACEMENT.

5. VALVE LOCATION TAGS REQUIRED ON ALL SHUT-OFFS AND LOCATION CHART REQUIRED.

6. THE DOMESTIC WATER SYSTEM SHALL BE FLUSHED, PRESSURE TESTED AND PURIFIED. TEST WATER UNDER 80-100 PSIG HYDROSTATIC PRESSURE FOR 15 MINUTES MINIMUM. WHEN TESTING INDICATES MATERIALS OR WORKMANSHIP IS DEFICIENT, REPLACE OR REPAIR AS REQUIRED, AND REPEAT UNTIL STANDARDS ARE ACHIEVED. ALL PIPING SYSTEMS SHALL BE SUBJECTED TO A DISINFECTION PROCEDURE PER THE RULES AND REGULATIONS OF THE LOCAL AUTHORITIES.

SANITARY SEWER, STORM SEWER, AND VENT PIPING

1. ALL OPENINGS IN DRAINAGE AND/OR VENT SYSTEMS AS A RESULT OF DEMOLITION OR INSTALLATION ROUGH-IN SHALL BE PROTECTED WITH A TEST PLUG THAT IS SECURELY LOCKED IN PLACE UNTIL FINAL FINISHED CONNECTIONS ARE INSTALLED.

2. PROVIDE A COMPLETE SYSTEM OF PVC VENT PIPING WITH AIR ADMITTANCE VALVES.

3. CONDENSATE AND INDIRECT DRAIN PIPING SHALL BE TYPE PVC UP TO 1" ID.

4. DRAINAGE PIPING UNDERGROUND AND OUTSIDE THE BUILDING SHALL BE PVC PIPE AND FITTINGS. (ALTERNATE MATERIALS MAY BE ALLOWED IF APPROVED BY LOCAL CODE AUTHORITIES.)

5. DRAINAGE PIPING INSIDE THE BUILDING SHALL BE PVC PIPE AND FITTINGS WITH SCHEDULE 40 PVC VENTS TO AIR ADMITTANCE VALVES.

6. PROVIDE CLEANOUTS AS SHOWN ON FLOOR PLAN AND ISOMETRIC ON DRAWING P2.0 3

7. ALL DRAINAGE PIPING SHALL BE UNIFORMLY PITCHED, 1/4" PER FOOT UNLESS OTHERWISE REQUIRED BY EXISTING CONDITIONS, MINIMUM SLOPE SHALL BE PER CODE.

8. ALL FLOOR DRAINS SHALL BE CONNECTED TO THE SANITARY SEWER SYSTEM.

9. THE DRAINAGE SYSTEMS SHALL BE FLUSHED AND PRESSURE TESTED.

SUBSTITUTIONS

1. THE NAMING OF MANUFACTURER'S IN THE SPECIFICATIONS SHALL NOT BE CONSTRUED AS ELIMINATING THE MATERIALS, PRODUCTS OR SERVICES OF OTHER MANUFACTURER'S AND SUPPLIERS HAVING EQUIVALENT ITEMS. ANY SUBSTITUTED ITEMS MUST BE EQUAL TO THOSE SPECIFIED, PROVIDE COST SAVINGS AND BE AVAILABLE TO MEET THE CONSTRUCTION SCHEDULE.

PLUMBING SYMBOLS

— CWS —	COLD WATER SUPPLY PIPING
— HWS —	HOT WATER SUPPLY PIPING
— SAN —	SANITARY WASTE PIPING
- - - V - - -	SANITARY VENT PIPING
— - —	COLD WATER SUPPLY PIPING
— - - —	HOT WATER SUPPLY PIPING
- - - - - - -	SANITARY VENT PIPING
BFP	BACKFLOW PREVENTER
CO	CLEANOUT
CP	CHROME PLATED
DN	DOWN
DW	DISHWASHER
ET	EXPANSION TANK
FD	FLOOR DRAIN
GALV	GALVANIZED
INV. EL.	INVERT ELEVATION
IM	ICE MAKER
LAV	LAVATORY
NC	NEW CONNECTION
PRV	PRESSURE REDUCING VALVE
PSIG	POUNDS PER SQUARE INCH
S	SANITARY
SHR	SHOWER
SK	SINK
TMV	THERMOSTATIC MIXING VALVE
V	VENT
VTR	VENT THRU ROOF
W	WASTE
WC	WATER CLOSET
WH	WATER HEATER
	LINE SIZE BALL GATE VALVE
	LINE SIZE BALANCING VALVE
	LINE SIZE BALL VALVE (2" & SMALLER) OR LINE SIZE BUTTERFLY VALVE (2-1/2" & LARGER)
	LINE SIZE CHECK VALVE
	LINE SIZE UNION
	PRESSURE REDUCING VALVE
	PRESSURE RELIEF VALVE
	REDUCER
	THERMOMETER

DATE:	REV:	DESCRIPTION:
8/17/23	1	PLAN REVIEW COMMENTS
9/13/23	2	OWNER CLARIFICATIONS
10/6/23	3	PLAN REVIEW REVISIONS

PROFESSIONAL SEAL

SHEET FORMAT:	ARCH C
SHEET SCALE:	1:3
CREATED BY:	MT
RELEASE DATE:	6/9/2023

MODEL: 2 DOOR CASITA (ARIZONA)

MODEL #: BXB-000009

SHEET: P1.0

BOXABL INC.
5345 EAST NORTH BELT ROAD
NORTH LAS VEGAS, NV 89115, USA
+1(702) 500-9000 HELLO@BOXABL.COM

PROPRIETARY AND CONFIDENTIAL
THE INFORMATION CONTAINED IN THIS DRAWING IS THE SOLE PROPERTY OF BOXABL INC. ANY REPRODUCTION IN PART OR AS A WHOLE WITHOUT THE WRITTEN PERMISSION OF BOXABL INC. IS PROHIBITED.

BOXABL

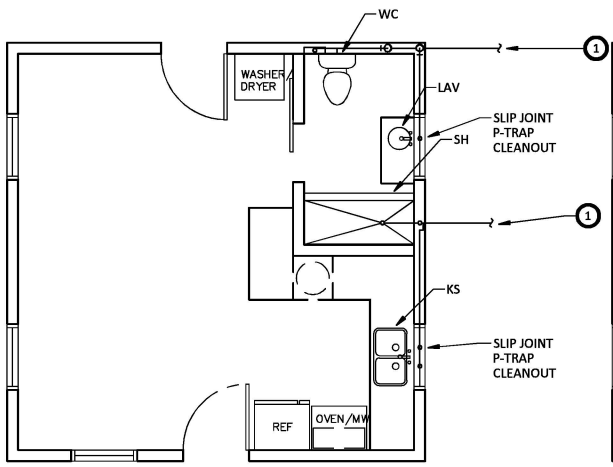

1 PLUMBING SANITARY PLAN
1/4" = 1'-0"

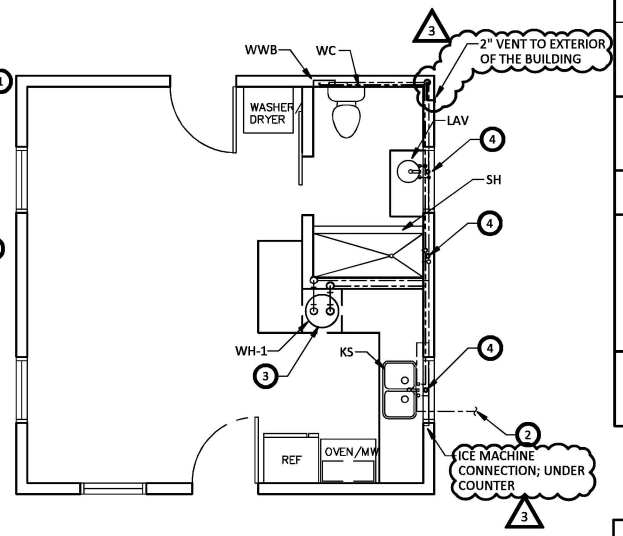

2 PLUMBING DOMESTIC WATER PLAN
1/4" = 1'-0"

PLAN NOTES

1	PROVIDE 2" & 3" SANITARY PIPING TO THE NEW BOXABL HOUSE. COORDINATE WITH CIVIL DRAWINGS THE EXACT LOCATION OF THE NEW SANITARY PIPING.
2	PROVIDE 3/4" DOMESTIC COLD WATER TO NEW BOXABL HOUSE. COORDINATE WITH CIVIL DRAWINGS THE EXACT LOCATION OF THE NEW DOMESTIC COLD WATER PIPING.
3	ACCESS TO THE TANK WATER HEATER IS THRU A REMOVABLE PANEL IN THE CABINET.
4	AIR ADMITTANCE VALVE. OATEY SURE-VENT AIR ADMITTANCE VALVE, 1.5" x 2" PVC SCHEDULE 40 ADAPTER. VALVE SHALL BE RATED FOR 24 STACK DFU'S AND 160 BRANCH DFU'S. VALVE SHALL BE LISTED PER ANSI/ASSE 1050 AND 1051. VALVE SHALL BE MANUFACTURER BY OATEY OR AN APPROVED EQUIVALENT.
5	WHOLE HOUSE WATER HAMMER ARRESTOR MIFAB MODEL CL-A-NPB. WATER HAMMER ARRESTOR TO BE MAUFACTURED BY MIFAB OR AN APPROVED EQUIVALENT.

GENERAL NOTE

IF THE BUILDING IS ATTACHED TO A SEPTIC SYSTEM THAN THE SEPTIC SYSTEM MUST BE VENTED.

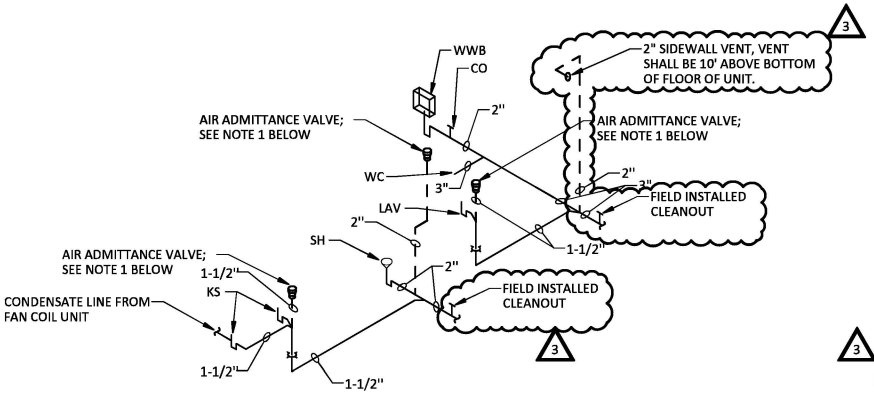

NOTES:
1. AIR ADMITTANCE VALVE SHALL BE ACCESSIBLE AND WITH ACCESS OF AIR MOVEMENT, SEE PLAN NOTE 4 FOR VALVE SPECIFICATION.

3 PLUMBING SANITARY ISOMETRIC
NOT TO SCALE

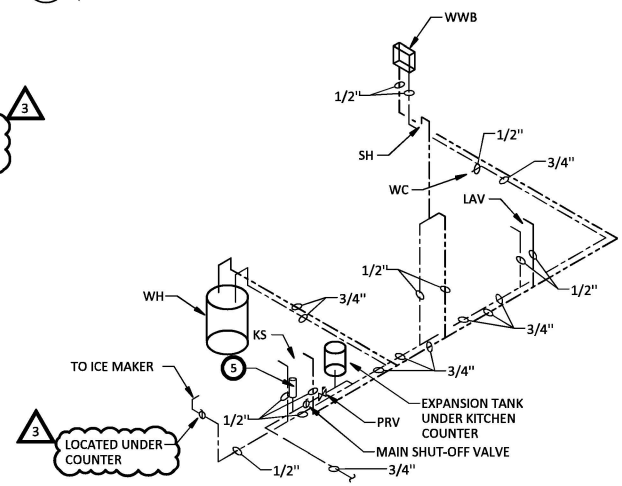

4 PLUMBING DOMESTIC WATER ISOMETRIC
NOT TO SCALE

DATE:	REV:	DESCRIPTION:
8/17/23	1	PLAN REVIEW COMMENTS
9/13/23	2	OWNER CLARIFICATIONS
10/6/23	3	PLAN REVIEW REVISIONS

PROFESSIONAL SEAL

SHEET FORMAT:	ARCH C
SHEET SCALE:	1:3
CREATED BY:	MT
RELEASE DATE:	6/9/2023

MODEL: 2 DOOR CASITA (ARIZONA)

MODEL #: BXB-000009

SHEET: P2.0

BOXABL INC.
5345 EAST NORTH BELT ROAD
NORTH LAS VEGAS, NV 89115, USA
+1(702) 500-9000 HELLO@BOXABL.COM

PROPRIETARY AND CONFIDENTIAL
THE INFORMATION CONTAINED IN THIS DRAWING IS THE SOLE PROPERTY OF BOXABL INC. ANY REPRODUCTION IN PART OR AS A WHOLE WITHOUT THE WRITTEN PERMISSION OF BOXABL INC. IS PROHIBITED.

BOXABL

FIXTURE SCHEDULES

FIXTURE	TYPE	MFG'R.	MODEL NO.	COLOR	FAUCET	TRAP	TRIM	SUPPLY FITTING	REMARKS
WC	WATER CLOSET	SANIFLO	083 & 005	WHITE	N/A	INTERGRAL P-TRAP	N/A	3/8"	1.28 GALLONS/FLUSH
LAV	LAVATORY	BEELEE	BL6790BH	MATTE BLACK	1.2 GPM	N/A	MATTE BLACK	3/8"	
KS	KITCHEN FAUCET	MOEN	5925BL	MATTE BLACK	1.5 GPM	N/A	MATTE BLACK	3/8"	
SH	SHOWER	MOEN	T2472EPBL	MATTE BLACK	1.75 GPM	N/A	MATTE BLACK	1/2"	
WWB-1	WASHER WALL BOX	SIOUX CHIEF	688-G10	WHITE	N/A	N/A	N/A	2 @1/2"	

NOTE: FIXTURES TO BE PROVIDE BY MANUFACTURER AS SCHEDULED OR AN APPROVED EQUIVALENT.

WATER HEATER SCHEDULE

DESIG'N.	TYPE	MFG'R.	MODEL NO.	STORAGE GALLON CAPACITY	ELECTRICAL			RECOVERY AT 80°F RISE	TANK LINING	WARRANTY	REMARKS
					KW	VOLTAGE	PHASE				
WH-1	TANK	A.O. SMITH	ENLB-30	30	4.5	240	SINGLE	23	YES	YES	

NOTE: WATER HEATER TO BE MANUFACTURED BY A.O. SMITH OR AN APPROVED EQUAL.

WATER SUPPLY FIXTURE UNITS

Quantity	Fixture Tag	Fixture	Occupancy	Type of Supply Control	Load Values in water supply fixture units (wsfu)			Total Load Values in water supply fixture units (wsfu)		
					Cold	Hot	Total	Cold	Hot	Total
1	DW	Dishwashing machine	Private	Automatic	0.00	1.40	1.40	0.00	1.40	1.40
1	IM	Ice Macine	Private	3/8" valve	0.25	0.00	0.25	0.25	0.00	0.25
1	KS	Kitchen sink	Private	Faucet	1.00	1.00	1.40	1.00	1.00	1.40
1	LAV	Lavatory	Private	Faucet	0.50	0.50	0.70	0.50	0.50	0.70
1	SH	Shower head	Private	Mixing valve	1.00	1.00	1.40	1.00	1.00	1.40
1	WM	Washing machine (8 lb)	Private	Automatic	1.00	1.00	1.40	1.00	1.00	1.40
1	WC	Water closet	Private	Flush tank	2.20	0.00	2.20	2.20	0.00	2.20
				Total WSFU				5.95	4.90	8.75

DRAINAGE FIXTURE UNITS

Quantity	Fixture Tag	Fixture Type	Drainage Fixture Unit Value As Load Factors	Minimum Size of Trap (inches)	Total Drainage Fixture Unit Value As Load Factors
1	WM	Automatic clothes washers, residential	2.00	2.00	2.00
1	DW	Dishwashing machine, domestic	2.00	1.50	2.00
1	KS	Kitchen sink, domestic	2.00	1.50	2.00
1	LAV	Lavatory	1.00	1.25	1.00
1	SH1	Shower Flow Rate 5.7 gpm or less	2.00	1.50	2.00
1	WC	Water closet, private (1.6 gpf)	3.00		3.00
		Total DFU's			12.00

3 NOTE:
THREE AIR ADMITTANCE VALVES (AAV) ARE BEING PROVIDED FOR THE BUILDING, EACH AAV IS RATED FOR 24 DFU'S WHICH WILL SATISFY THE TOTAL BUILDING LOAD OF 12 DFU'S.

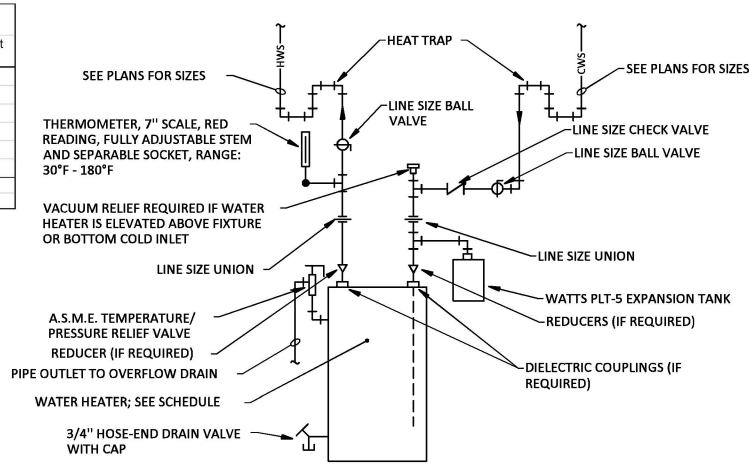

4

DOMESTIC WATER HEATER PIPING DETAIL - ELECTRIC

NOT TO SCALE

DATE:	REV:	DESCRIPTION:
8/17/23	1	PLAN REVIEW COMMENTS
9/13/23	2	OWNER CLARIFICATIONS
10/6/23	3	PLAN REVIEW REVISIONS

PROFESSIONAL SEAL

SHEET FORMAT:	ARCH C
SHEET SCALE:	1:3
CREATED BY:	MT
RELEASE DATE:	6/9/2023

MODEL: 2 DOOR CASITA (ARIZONA)

MODEL #: BXB-000009

SHEET: P3.0

BOXABL INC.
5345 EAST NORTH BELT ROAD
NORTH LAS VEGAS, NV 89115, USA
+1(702) 500-9000 HELLO@BOXABL.COM

PROPRIETARY AND CONFIDENTIAL
THE INFORMATION CONTAINED IN THIS DRAWING IS THE SOLE PROPERTY OF BOXABL INC. ANY REPRODUCTION IN PART OR AS A WHOLE WITHOUT THE WRITTEN PERMISSION OF BOXABL INC. IS PROHIBITED.

BOXABL

ELECTRICAL SPECIFICATIONS:

E1. A QUALIFIED ELECTRICIAN SHALL FURNISH AND INSTALL ALL LABOR, TOOLS, MATERIAL, EQUIPMENT, SERVICES, AND RELATED ACCESSORIES NECESSARY FOR THE COMPLETE INSTALLATION OF ELECTRICAL WORK SHOWN ON THE DRAWINGS, SPECIFIED IN THE NOTES, AND REQUIRED BY LOCAL CODE AUTHORITIES.

E2. ALL WORK SHALL COMPLY WITH THE 2017 NEC AND 2018 INTERNATIONAL RESIDENTIAL CODE.

E3. OBTAIN AND PAY FOR ALL PERMITS AND FEES RELATING TO ELECTRICAL SYSTEM.

E4. IT IS INTENDED THAT ALL ITEMS OF WORK AND SYSTEMS BE COMPLETE AND WIRED COMPLETE IN ALL DETAILS, READY FOR SATISFACTORY OPERATION AND SERVICE. APPARATUS REQUIRED SHALL BE FURNISHED, EVEN THOUGH NOT SPECIFICALLY MENTIONED HEREIN, OR SHOWN ON THE DRAWINGS.

E5. PROVIDE GROUNDING OF ELECTRICAL WORK IN STRICT ACCORDANCE WITH THE APPLICABLE CODES AND THEIR AUTHORITIES.

E6. COORDINATE ALL WORK WITH OTHER TRADES PRIOR TO ANY INSTALLATION.

E7. PROVIDE CODE APPROVED CLEARANCES AROUND ELECTRICAL EQUIPMENT.

E8. MATERIALS AND EQUIPMENT SHALL BE NEW AND SHALL CONFORM TO THE NEMA STANDARDS, NATIONAL ELECTRICAL CODE (NEC) IN EVERY CASE, WHERE SUCH STANDARDS HAVE BEEN ESTABLISHED. ALL ELECTRICAL MATERIALS, DEVICES, APPLIANCES, FITTINGS AND OTHER EQUIPMENT SHALL BE LISTED AND LABELED BY A QUALIFIED TESTING AGENCY AND SHALL BE CONNECTED IN AN APPROVED MANNER WHEN INSTALLED.

E9. TESTING - AFTER WIRES ARE IN PLACE AND CONNECTED TO DEVICES AND EQUIPMENT, THE SYSTEM SHALL BE TESTED FOR SHORTS AND GROUNDS. ALL HOT WIRES, IF SHORTED OR GROUNDED, SHALL BE REMOVED AND REPLACED.

E10. ALL METERS, INSTRUMENTS, CABLE CONNECTION, EQUIPMENT, OR APPARATUS NECESSARY FOR MAKING ALL TESTS, SHALL BE FURNISHED BY THIS CONTRACTOR AT HIS OWN EXPENSE.

E11. AFTER THE COMPLETION OF THE INSTALLATION, THE ENTIRE SYSTEM SHALL BE THOROUGHLY CLEANED. CLEAN ALL FOREIGN MATTER, PAINT, OIL, DIRT, UNREQUIRED LABELS, GREASE, AND STICKERS FROM FIXTURES AND EQUIPMENT. REMOVE FROM THE PREMISES ALL RUBBISH, DEBRIS, ETC. ACCUMULATED BY THE ELECTRICAL INSTALLATION.

E12. THE CONTRACTOR SHALL BE RESPONSIBLE FOR PROTECTING ALL EQUIPMENT AND SYSTEMS AGAINST HARMFUL EXPOSURE, OR ACCUMULATION OF DUST/MOISTURE, FLOODING, CORROSION, OR OTHER FORMS OF DAMAGE. CLEAN AND RESTORE DAMAGED FINISHES AND EQUIPMENT TO PLACE INSTALLATION IN A LIKE-NEW CONDITION.

E13. UNLESS SPECIFICALLY NOTED OTHERWISE, ALL INTERIOR WIRING SHALL BE NM-B CABLE. ELECTRICIAN SHALL PROVIDE EXTENSION OF ALL CABLE FROM JUNCTION BOX TO ELECTRICAL PANEL. PROVIDE CODE COMPLIANT RACEWAY AND WIRING FROM INTERIOR JUNCTION BOX TO EXTERIOR PANEL. SEAL OPENING WEATHERTIGHT. PROVIDE INTERCONNECTION OF CABLES BETWEEN THE WALLS AND ROOF PANELS. THERE MAY BE SEVERAL CIRCUITS IN EACH PANEL. EACH IS LABELED WITH CIRCUIT NAME, CONNECT CIRCUITS OF LIKE NAMES.

E14. DISCONNECT SWITCHES SHALL BE QUICK-MAKE, QUICK-BREAK TYPE IN NEMA ENCLOSURE TO MATCH LOCATION AND USE. SWITCHES SHALL BE LISTED FOR THEIR USE.

E15. PANEL/LOAD CENTER SHALL BE AS SHOWN ON THE DRAWINGS WITH 100A-2P MAIN BREAKER AND BRANCH BREAKERS AS SCHEDULED. UNIT IS PROVIDED IN A NEMA 3R ENCLOSURE FOR EXTERIOR MOUNTING. INSTALL IN ACCORDANCE WITH MANUFACTURER'S INSTRUCTIONS. INSTALL BREAKERS AS REQUIRED. PANEL/LOAD CENTERS SHALL BE SQUARE D QO SEREIS WITH QO BREAKERS OR EATON, SEIMENS OR GENERAL ELECTRIC EQUIVALENT. TERMINATE ALL CABLING AND WIRING AT PANEL/LOAD CENTER IN ACCORDANCE WITH NEC REQUIREMENTS.

E16. INSTALL COMBINATION WASHER/DRYER BACKBOX WIRING AND PLUG IN WALL.

E17. ASSEMBLE AND INSTALL PENDANT LIGHT FURNISHED WITH UNIT. PENDANT LIGHT SHALL BE LISTED PER 410.10(D).

E18. INSTALL SMOKE DETECTOR FURNISHED WITH UNIT.

E19. ASSEMBLE AND INSTALL EXTERIOR SCONCE LIGHT FURNISHED WITH UNIT BY FRONT DOOR. SEAL LIGHT TO EXTERIOR WALL TO BE WEATHER TIGHT.

E19. ASSEMBLE AND INSTALL EXTERIOR SCONCE LIGHT FURNISHED WITH UNIT BY FRONT DOOR. SEAL LIGHT TO EXTERIOR WALL TO BE WEATHER TIGHT.

E20. ALL EQUIPMENT LOCATED OUTDOORS SHALL BE WEATHERPROOF TYPE.

E21. FURNISH AND INSTALL A COMPLETE AND OPERABLE SYSTEM OF SERVICE AND DISTRIBUTION FROM THE UTILITY COMPANY TRANSFORMERS OR FROM FEED FROM ANOTHER STRUCTURE TO THE PANEL/LOAD CENTER AS REQUIRED. PROVIDE A 120/240V., 1PH., 3W. SERVICE OR FEEDER TO THE LOAD CENTER RATED AT 100 AMPERES. MINIMUM FEEDER SIZE TO THE HOUSE SHALL BE 3 # 1 AWG COPPER CONDUCTORS. COORDINATE FINAL GROUNDING WITH METHOD OF FEEDING. SUGGESTED SERVICE GROUNDING DETAIL IS FOR UTILITY FED BUILDING.

E22. TWO SMALL APPLIANCE 20A BRANCH CIRCUITS HAVE BEEN PROVIDED PER NEC 210.11 (C)(1) SERVING ONLY ABOVE COUNTER RECEPTACLES.

E23. LAUNDRY AREA 20A BRANCH CIRCUITS HAS BEEN PROVIDED PER NEC 210.11 (C)(2) SERVING ONLY LAUNDRY AREA.

E24. INDIVIDUAL APPLIANCE BRANCH CIRCUITS HAVE BEEN PROVIDED SERVING DEDICATED APPLIANCES INCLUDING HEAT A/C UNIT, REFRIGERATOR, MICROWAVE AND ELECTRIC RANGE.

E25. BATHROOM RECEPTACLE 20A BRANCH CIRCUIT HAS BEEN PROVIDED PER NEC 210.11 (C)(3) SERVING ONLY BATHROOM RECEPTACLES.

E26. RECEPTACLE OUTLETS HAVE BEEN INSTALLED IN ACCORDANCE WITH NEC 210.52. ALL RECEPTACLES SHALL BE LISTED AND GROUNDED TYPE AND INSTALLED IN ACCORDANCE WITH NEC 406.4. ALL RECEPTACLES SHALL BE PROVIDED WITH AFCI PROTECTION. ALL 15A AND 20A KITCHEN, BATHROOM, LAUNDRY, AND OUTDOOR RECEPTACLES SHALL BE GFCI TYPE. ALL OUTDOOR RECEPTACLES SHALL BE WEATHER RESISTANT TYPE WITH WEATHERPROOF COVERS AND WEATHER SEALED TO BUILDING FRAME

E27. PROVIDE GROUNDING AND BONDING SHALL BE PROVIDED PER NEC 250.

E28. FITTINGS AND CONNECTORS THAT ARE INTENDED TO BE CONCEALED AT THE TIME OF ASSEMBLY SHALL BE LISTED AND IDENTIFIED FOR THE INTERCONNECTION OF BUILDING COMPONENTS. SUCH FITTING SHALL BE EQUAL TO THE WIRING METHOD EMPLOYED IN INSULATION, TEMPERATURE RISE, AND FAULT-CURRENT WITHSTANDING AND SHALL BE CAPABLE OF ENDURING THE VIBRATION AND SHOCK OCCURRING IN TRANSPORT.

E29. GROUNDING OF BOTH ELECTRICAL AND NON ELECTRICAL METAL PARTS SHALL BE THROUGH CONNECTION TO A GROUNDING BUS IN THE PANEL/LOAD CENTER AND SHALL BE CONNECTED THROUGH THE GREEN-COLORED INSULATED CONDUCTOR IN THE FEEDER WIRING TO THE GROUNDING BUS IN THE SERVICE ENTRANCE EQUIPMENT.

E30. THE INSTALLATION OF THE SERVICE EQUIPMENT SHALL COMPLY WITH ARTICLE 230. MEANS SHALL BE PROVIDED FOR THE CONNECTION OF A GROUNDING ELECTRODE CONDUCTOR TO THE SERVICE EQUIPMENT AND ROUTING IT OUTSIDE THE STRUCTURE. BONDING AND GROUNDING OF THE SERVICE SHALL BE IN ACCORDANCE WITH ARTICLE 250. THE MANUFACTURER SHALL INCLUDE IN ITS WRITTEN INSTALLATION INSTRUCTIONS ONE METHOD OF GROUNDING THE SERVICE EQUIPMENT AT THE INSTALLATION SITE. THE INSTRUCTIONS SHALL CLEARLY STATE THAT OTHER METHODS OF GROUNDING ARE FOUND IN ARTICLE 250.
THE MINIMUM SIZE GROUNDING ELECTRODE CONDUCTOR SHALL BE # 8 AWG COPPER.

A WARNING LABEL SHALL BE MOUNTED ON OR ADJACENT TO THE SERVICE EQUIPMENT. THE LABEL SHALL STATE THE FOLLOWING:
"WARNING DO NOT PROVIDE ELECTRICAL POWER UNTIL THE GROUNDING ELECTRODE(S) IS INSTALLED AND CONNECTED (SEE INSTALLATION INSTRUCTIONS)."

WHERE THE SERVICE EQUIPMENT IS NOT INSTALLED IN OR ON THE UNIT, THE INSTALLATION SHALL COMPLY WITH THE OTHER PROVISIONS OF THE NEC.

NOTES:

G1. CONTRACTOR SHALL OBTAIN APPROVAL FROM LOCAL CODE AUTHORITIES BEFORE INSTALLING GROUNDING.

G2. CONCRETE ENCASED ELECTRODE ENCASED BY A MINIMUM OF 2" OF CONCRETE ON ALL SIDES LOCATED WITHIN AND NEAR THE BOTTOM OF A CONCRETE FOOTING OR FOUNDATION. ELECTRODE SHALL CONSIST OF A MINIMUM OF 20' OF BARE COPPER CONDUCTOR (# 4) WHERE APPLICABLE. (SEE NEC 250.52 (A) (3) (2))

G3. BOND TO REBAR STUBOUT IN FOUNDATION PER NEC 250 WHERE APPLICABLE (SEE NEC 250.52 (A) (3) (1))

SYMBOL LIST

SYMBOL	DESCRIPTION
(J), (J)	JUNCTION BOX - WALL OR CEILING MOUNTED
	NON - FUSED DISCONNECT SWITCH
	FUSED DISCONNECT SWITCH
	MOTOR CONNECTION - H.P. AS NOTED ON DRAWINGS
	NM-B CABLE RUN CONCEALED IN CEILING OR WALLS. X DENOTES GROUND WIRE DENOTES NEUTRAL CONDUCTOR DENOTES HOT CONDUCTOR
	LOAD CENTER
	DUPLEX RECEPTACLE (NEMA 5-20R) (+18" AFF UNLESS NOTED OTHERWISE)
	DUPLEX RECEPTACLE (NEMA 5-20R) (MOUNTED 6" ABOVE COUNTER TOP UNLESS NOTED OTHERWISE)
	DUPLEX CONVENIENCE OUTLET (NEMA 5-15R)
	SPECIAL OUTLET. REFER TO POWER PLAN ON SHEET E1.0 FOR REQUIREMENTS
	SINGLE NEMA 5-20R RECEPTACLE
SD	CEILING MOUNTED COMINATION SMOKE/FIRE/CARBON MONOXIDE ALARM - USI ELECTRIC # MUC1509S HARDWIRED ALARM WITH 10 YEAR SEALED BATTERY OR EQUAL.
A.	DENOTES AMPERES
A.C.	DENOTES ABOVE COUNTER
A.F.F.	DENOTES ABOVE FINISHED FLOOR
AFCI	DENOTES ARC FAULT CIRCUIT INTERRUPTER
C.	DENOTES CONDUIT
GFCI	DENOTES GROUND FAULT CIRCUIT INTERRUPTER
GRD.	DENOTES GROUND
M.L.O.	DENOTES MAIN LUGS ONLY
WP	DENOTES WEATHERPROOF (NEMA 3R)

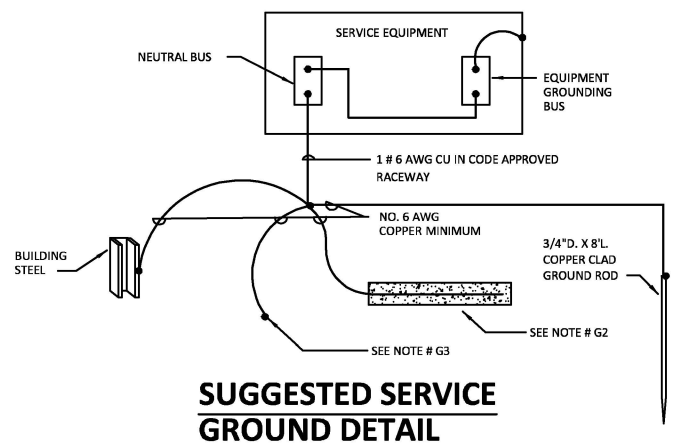

SUGGESTED SERVICE GROUND DETAIL

NO SCALE

DATE:	REV:	DESCRIPTION:
8/17/23	1	PLAN REVIEW COMMENTS
9/13/23	2	OWNER CLARIFICATIONS
10/6/23	3	PLAN REVIEW REVISIONS

PROFESSIONAL SEAL

SHEET FORMAT:	ARCH C
SHEET SCALE:	1:3
CREATED BY:	MT
RELEASE DATE:	6/9/2023

MODEL: 2 DOOR CASITA (ARIZONA)

MODEL #: BXB-000009

SHEET: E1.0

BOXABL INC.
5345 EAST NORTH BELT ROAD
NORTH LAS VEGAS, NV 89115, USA
+1(702) 500-9000 HELLO@BOXABL.COM

PROPRIETARY AND CONFIDENTIAL
THE INFORMATION CONTAINED IN THIS DRAWING IS THE SOLE PROPERTY OF BOXABL INC. ANY REPRODUCTION IN PART OR AS A WHOLE WITHOUT THE WRITTEN PERMISSION OF BOXABL INC. IS PROHIBITED.

BOXABL

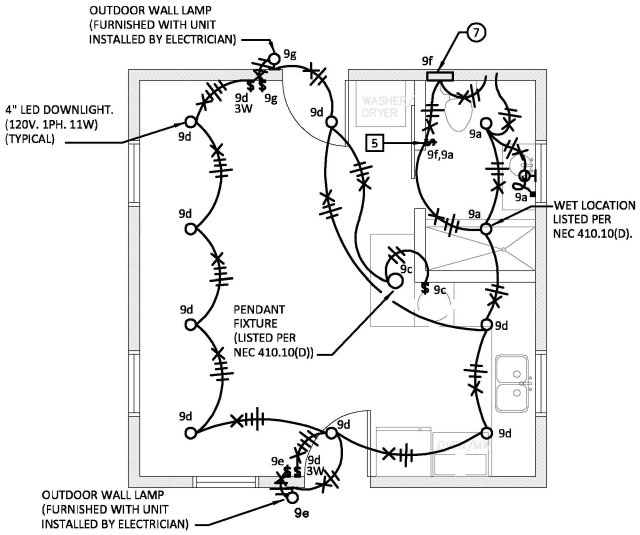

LIGHTING PLAN

SCALE: 1/4"=1'-0"

0' 4' 8' 12' 16'

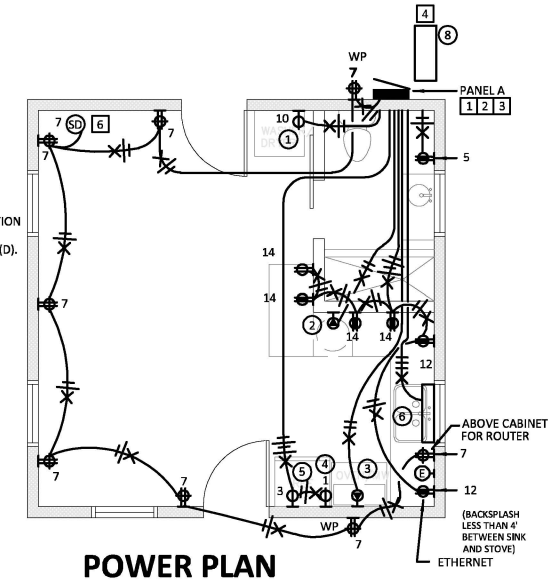

POWER PLAN

SCALE: 1/4"=1'-0"

0' 4' 8' 12' 16'

POWER NOTES:

1. LOAD CENTER FULLY ASSEMBLED AND INSTALLED IN FACTORY.
2. ELECTRICIAN TO PROVIDE ELECTRICAL FEEDER/ELECTRICAL SERVICE FROM SITE TO LOAD CENTER.
3. ELECTRICIAN TO PROVIDE SERVICE GROUND/BUILDING GROUND PER NEC REQUIREMENTS.
4. ELECTRICIAN TO WIRE OUTDOOR CONDENSER UNIT EXTEND WIRING AND INTERCONNECT WIRING FROM INDOOR FAN COIL PER MANUFACTURERS DIRECTIONS. COORDINATE INSTALLATION WITH MECHANICAL CONTRACTOR AS TO NOT IMPEDE CODE REQUIRED CLEARANCE FOR ELECTRICAL PANELS/SERVICE DISCONNECTS.
5. PROVIDE COMBO BATH FAN/LIGHT SWITCH WITH VENTILATION CONTROL & DELAY TIMER. (LEGRAND RADIANT 4 BUTTON DIGITAL TIMER # RT2BKCCV4 OR EQUAL)
6. COMBINATION SMOKE/FIRE/CARBON MONOXIDE ALARM WITH BATTERY BACKUP. UNIVERSAL SECURITY INSTRUMENTS # MIC1509S HARDWIRED 3 IN 1 SMART ALARM WITH 10 YEAR SEALED BATTERY OR EQUAL. DETECTOR SHALL BE LOCATED MINIMUM OF 20 FEET FROM COOKING APPLIANCE.

CIRCUIT PROTECTION NOTES:

- ARC FAULT CIRCUIT INTERRUPTER PROTECTION SHALL BE PROVIDED FOR ALL 15 AND 20A BRANCH CIRCUITS SUPPLYING OUTLETS AND DEVICES IN ACCORDANCE WITH NEC 210.12(A).
- GROUND FAULT CIRCUIT INTERRUPTER PROTECTION SHALL BE PROVIDED FOR ALL 15A AND 20A RECEPTACLES AND EQUIPMENT IN ACCORDANCE WITH NEC 210.8.

EQUIPMENT SCHEDULE

# MARK	EQUIPMENT DESCRIPTION	VOLTAGE	PHASE	AMPS	RECEPTACLE TYPE	CIRCUIT DATA: CIRCUIT NUMBER	CONDUCTORS: QTY.	SIZE	EQ. GND.		HEIGHT
1	WASHER DRYER	120	1	10.0	5-20R	A-10	2	#12	#12		18" A.F.F.
2	WATER HEATER	240	1	18.75	6-30R	A-(6,8)	2	# 10	#10		18" A.F.F.
3	RANGE	240	1	40.0	14-50R*	A-(2,4)	2	#6	#10		18" A.F.F.
4	REFRIGERATOR	120	1	12	5-20R	A-1	2	#12	#12		18" A.F.F.
5	MICROWAVE	120	1	12	5-20R	A-3	2	#12	#12		84" A.F.F.
6	FAN COIL UNIT FCU-1	240	1	1.0	-	WIRE TO CU-1	3	#14	#14		-
7	EXHAUST FAN EF-1	120	1	11 WATTS	-	A-9f	2	#12	#12		-
8	OUTDOOR CONDENSER CU-1	240	1	15.0	-	A-(11,13)	2	#10	#10		-

*14-50R IS A THREE PHASE RECEPTACLE ONLY TWO PHASES USED. COORDINATE PHASING.

ELECTRICAL CALCULATIONS (NEC)

5-Oct-2023

PROJECT: DELAWARE
JOB NUMBER: 22190
CALCULATION BY: RPM

Arizona Casita BXB-000009

PANEL DESIGNATION	A									
TOTAL AREA (SQ.FT)	361		SERVICE:		120/240V., 1PH., 3W.					
GENERAL LIGHTING LOAD CALC	AREA	361	X				3	WT/SQ FT WT/SQ FT	1083	W GEN. LTG/REC
SMALL APPLIANCE		2	X	1	QTY OF UNITS	X	1500	WATTS	3000	W SM. APP.
LAUNDRY		1	X	1	QTY OF UNITS	X	1500	WATTS	1500	W LAUNDRY
					SUBTOTAL				5583	
DEMAND										
1ST 20 KW		AT	100%		5583			=	5,583	
WATER HEATER					4500	X	100%	=	4,500	
DISHWASHER					0	X	100%	=	0	
MISC					MISC	X	100%	=	0	
MISC					0	X	100%	=	0	
FAN COIL					240	X	100%	=	240	
AC					2400	X	100%	=	2,400	
ELECTRIC DRYER					0	X	100%	=	0	
ELECTRIC RANGE					9600	X	80%	=	7,680	
LARGEST MOTOR					0	X	25%	=	0	
TOTAL DEMAND:									20,403	WATTS
VOLTAGE:	240		1	PHASE					20	KW
AMPS:	85.0									
MINIMUM SERVICE SIZE:		85	AMPS							
SERVICE SIZE:		100	AMPS							

PANEL DATA SCHEDULE — PANEL NAME: A

LOCATION: OUTDOOR
SERVICE: 120/240V.,1PH.,3W.
MAIN BREAKER: 100A-2P
MAIN LUGS ONLY:
NEUTRAL BUS: 100A
GROUND BUS: YES
SHORT CIRCUIT RATING: 10,000 RMS SYM AMPS

	CONNECTED LOAD	DEMAND LOAD
PHASE A	12.94 KVA	10.62 KVA
PHASE B	12.45 KVA	10.20 KVA
TOTAL	25.39 KVA	20.82 KVA
	106 AMPS	87 AMPS

DEMAND LOAD

KEY:			
L:	LIGHTING	0.19	KVA
R:	RECEPTACLES	5.63	KVA
M:	MOTORS	6.90	KVA
P:	PANELS	0.00	KVA
T:	TRANSFORMERS	0.00	KVA
E:	EQUIPMENT	8.10	KVA
S & X:	SPARE & SPACE	0.00	KVA

FLUSH ☐
SURFACE ■

NOTES: NEMA 3R – SERVICE ENTRANCE RATED – MINIMUM OF 3 # 2 AWG SERVICE
* DENOTES LOCK–OUT CLIP: ** DENOTES GFI BREAKER: *** DENOTES VIA TIMECLOCK: **** DENOTES VIA CONTACTOR

CIRCUIT USE	CONNECTED LOAD A	CONNECTED LOAD B	CCT. NO.	CIRCUIT BREAKER	CIRCUIT BREAKER	CCT. NO.	CONNECTED LOAD A	CONNECTED LOAD B	CIRCUIT USE
R: REFRIGERATOR	1,440		1	20A–1P AFGCI	50A–2P	2	4,800		E: RANGE
R: MICROWAVE		1,440	3	20A–1P AFGCI		4		4,800	E:
R: BATHROOM RECEPTACLE	360		5	20A–1P AFGCI	30A–2P	6	2,250		M: WATER HEATER
R: LIVING ROOM/EXTERIOR RECEPTS.		1,260	7	20A–1P AFGCI		8		2,250	M:
L: BATH/KITCHEN/LIVING ROOM LTS	192		9	15A–1P AFCI	20A–1P AFGCI	10	1,200		E: WASHER/DRYER
M: CU–1/FCU–1		1,200	11	30A–2P	20A–1P AFGCI	12		1,500	R: KITCHEN SMALL APPL.
M:	1,200		13		20A–1P AFGCI	14	1,500		R: DINING/KITCHEN SMALL APPL.
X: BLANKSPACE		0	15	BLANKSPACE	BLANKSPACE	16		0	X: BLANKSPACE
X: BLANKSPACE	0		17	BLANKSPACE	BLANKSPACE	18	0		X: BLANKSPACE
X: BLANKSPACE		0	19	BLANKSPACE	BLANKSPACE	20		0	X: BLANKSPACE
SUB TOTAL	3,192	3,900					9,750	8,550	SUB TOTAL

DATE:	REV:	DESCRIPTION:
8/17/23	1	PLAN REVIEW COMMENTS
9/13/23	2	OWNER CLARIFICATIONS
10/6/23	3	PLAN REVIEW REVISIONS

PROFESSIONAL SEAL

SHEET FORMAT:	ARCH C
SHEET SCALE:	1:3
CREATED BY:	MT
RELEASE DATE:	6/9/2023

MODEL: 2 DOOR CASITA (ARIZONA)

MODEL #: BXB-000009

SHEET: E2.0

BOXABL INC.
5345 EAST NORTH BELT ROAD
NORTH LAS VEGAS, NV 89115, USA
+1(702) 500-9000 HELLO@BOXABL.COM

PROPRIETARY AND CONFIDENTIAL
THE INFORMATION CONTAINED IN THIS DRAWING IS THE SOLE PROPERTY OF BOXABL INC. ANY REPRODUCTION IN PART OR AS A WHOLE WITHOUT THE WRITTEN PERMISSION OF BOXABL INC. IS PROHIBITED.

BOXABL

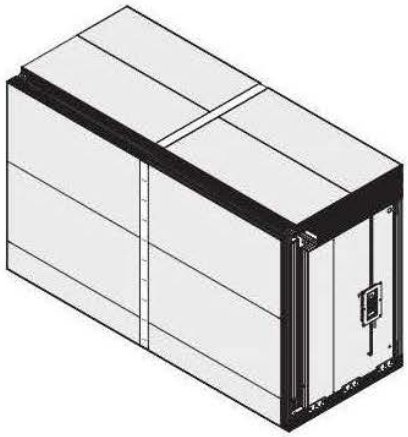

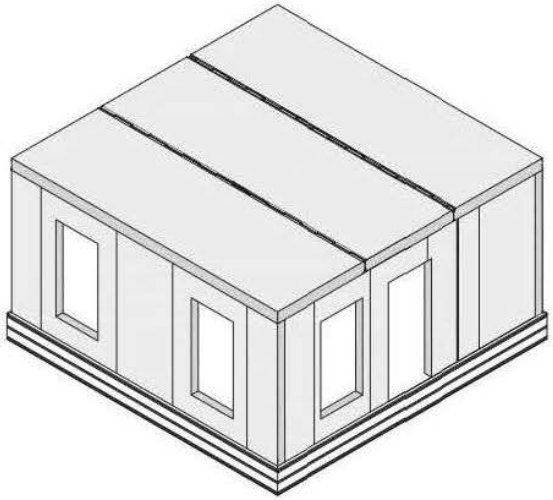

BOXABL

Studio Casita

Model # BXB-000009

ARIZONA

PRELIMINARY STRUCTURAL DRAWINGS

FOR INFORMATION / MARKETING ONLY. NOT FOR SITE-SPECIFIC USE.

APPROXIMATE MAXIMUM ELEVATIONS TO STAY WITHIN SNOW LOAD CAPACITY:

ZONE 1: NONE

ZONE 2: 5,200 ft

ZONE 3: 5,800 ft

ZONE 4: 5,300 ft

ZONE 5: NONE

ZONE 6: NONE

ZONE 7: 6,300 ft

SUITABILITY RESTRICTIONS:

MAX. ALLOWED ULTIMATE WIND SPEED:
115 mph, Exposure C
127 mph, Exposure B
104 mph, Exposure C (w/ ADDED ROOF TRUSSES)
115 mph, Exposure B (w/ ADDED ROOF TRUSSES)

WIND PRESSURE, qh = 12.1 psf (max.)

EXPOSURE B IS URBAN AND SUBURBAN AREAS, WOODED AREAS, OR OTHER TERRAIN w/ NUMEROUS, CLOSELY SPACED OBSTRUCTIONS THAT HAVE A SIZE OF A SINGLE-FAMILY DWELLING. THESE CONDITIONS PREVAIL IN THE UPWIND DIRECTION FOR A DISTANCE GREATER THAN 1,500 FT.

EXPOSURE C IS OPEN TERRAIN w/ SCATTERED OBSTRUCTIONS THAT HAVE HEIGHTS GENERALLY LESS THAN 30 FT. THIS INCLUDES FLAT, OPEN COUNTRY AND GRASSLANDS.

SEISMIC: NO RESTRICTIONS

MAX. ALLOWED GROUND SNOW LOAD, Pg = 41 psf (34 psf if located tight in among conifer trees)
(16 psf max. in Seismic Design Categories, D, E, F - reduced to 14 psf if located tight in among conifer trees)

MAX. ALLOWED ROOF SNOW LOAD, Pf = 29 psf
(12 psf max. in Seismic Design Categories, D, E, F)

AFTERMARKET ROOF REQUIREMENTS: OPTIONS & LIMITATIONS:

MAXIMUM SLOPE OF AFTERMARKET PITCHED ROOF TRUSS ADD-ON : 5:12
MAXIMUM SLOPE OF AFTERMARKET MONOSLOPE ROOF TRUSS ADD-ON : 2:12.
MAXIMUM ROOFING WT OVER TRUSSES : 16 psf
MAXIMUM TAPERED INSULATION WT: 2 psf
AFTERMARKET PRODUCTS DESIGNED & SUPPLIED BY OTHERS.
SEE ARCHITECTURAL DRAWINGS FOR ADD'L INFO INCLUDING MINIMUM SLOPE REQ'TS .

SPECIAL INSPECTIONS:

SIP SHEARWALLS INSTALLED IN BUILDINGS IN IBC SEISMIC DESIGN CATEGORIES C, D, E AND F, OR SEISMIC DESIGN CATEGORIES D0, D1, D2 AND E FOR DETACHED ONE-AND TWO-FAMILY DWELLINGS UNDER THE IRC, PERIODIC INSPECTION OF THE FASTENING AND ANCHORING OF THE SHEAR WALL ASSEMBLY WITHIN THE SEISMIC-FORCE-RESISTING SYSTEM MUST BE PROVIDED. INSPECTION MUST INCLUDE CONNECTIONS OF THE ASSEMBLIES TO HOLDDOWNS, IN ACCORDANCE WITH 2021 IBC SECTION 1705.14 AND 2018 IBC SECTION 1705 .12

THESE DRAWINGS REPRESENT THE UNDERSTANDING OF SIP ENGINEERING CONSULTANTS, LLC REGARDING THE CONSTRUCTION DETAILS USED BY BOXABL, INC. IN THEIR FACTORY. IF DISCREPANCIES ARE DISCOVERED BETWEEN THESE DRAWINGS AND ACTUAL CONSTRUCTION, THE ENGINEER SHALL BE PROMPTLY NOTIFIED SO THAT HE MAY HAVE THE OPPORTUNITY TO REVISE THE DRAWINGS AND ENGINEERING, IF REQUIRED. FAILURE TO PROMPTLY NOTIFY THE ENGINEER OF SUCH DISCREPANCIES, SHALL ABSOLVE THE ENGINEER FROM ANY RESPONSIBILITY OF SUCH FAILURE. ACTION TAKEN WITHOUT THE KNOWLEDGE AND CONSENT OF THE ENGINEER & SIP ENGINEERING CONSULTANTS, LLC, IN CONTRADICTION TO THESE DRAWINGS OR THE RECOMMENDATIONS OF THE ENGINEER SHALL BECOME THE RESPONSIBILITY OF THE PARTIES RESPONSIBLE FOR TAKING SUCH ACTION.

DATE:	REV:	DESCRIPTION:

PROPRIETARY AND CONFIDENTIAL

AS INSTRUMENTS OF SERVICE, THESE DRAWINGS SHALL REMAIN THE PROPERTY OF SIP ENGINEERING CONSULTANTS, LLC WHO SHALL RETAIN ALL COMMON LAW, STATUTORY & OTHER RESERVED RIGHTS, INCLUDING COPYRIGHTS. REPRODUCTION IS PROHIBITED WITHOUT THE EXPRESSED WRITTEN PERMISSION OF SIP ENGINEERING CONSULTANTS, LLC.

SIP Engineering Consultants, LLC

14712 SW Murray Scholls Dr.
328
Beaverton, OR 97007
Mike@SIPconsultants.com
Phone: 503-564-4178

UNITS:	FT-IN
SHEET FORMAT:	ARCH C
SHEET SCALE:	NONE
CREATED BY:	MN
RELEASE DATE:	11/3/2023
SHEET:	S1

MODEL: 2 DOOR CASITA

MODEL #: BXB-000009

ARIZONA

BOXABL INC.
5345 EAST NORTH BELT ROAD
NORTH LAS VEGAS, NV 89115, USA
+1(702) 500-9000 HELLO@BOXABL.COM

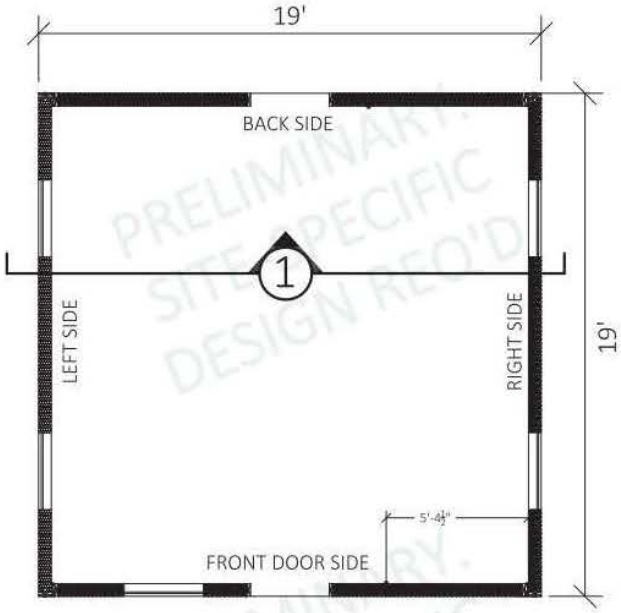

WALL PLAN

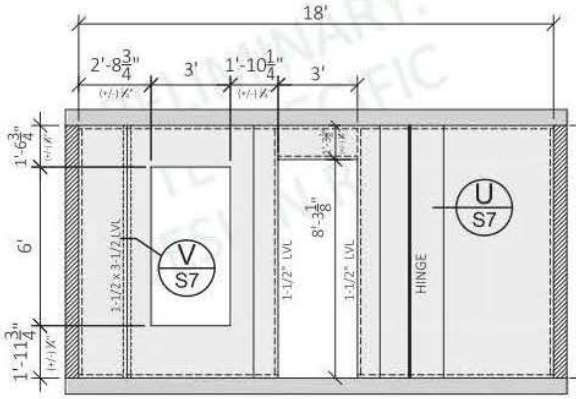

FRONT DOOR SIDE

EXTERIOR VIEW

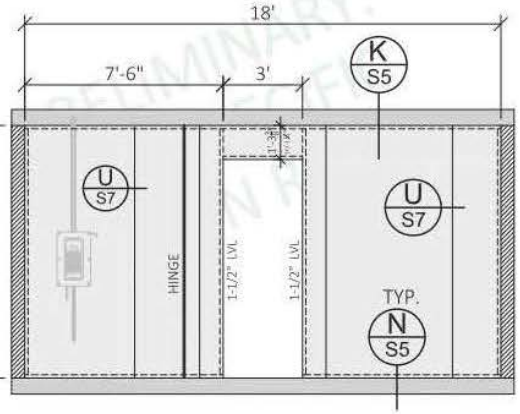

BACK SIDE

EXTERIOR VIEW

ALL VERTICLAL WALL LUMBER TO BE CONNECTED TO
TOP & BOT. PL'S w/ (2) #10 x 3" END SCREWS

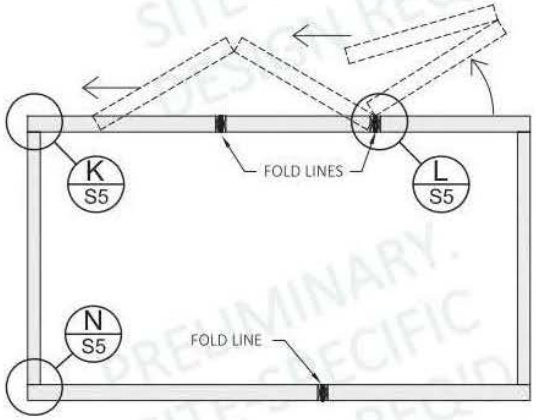

1 SECTION

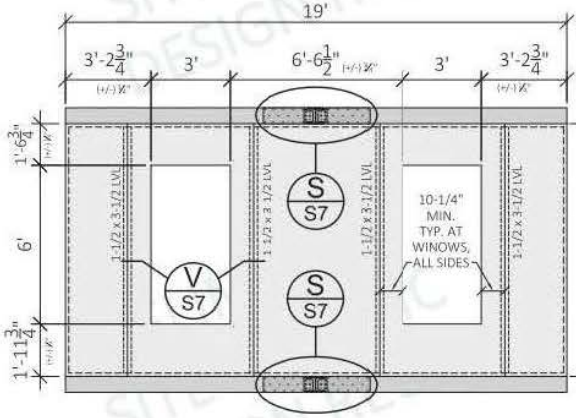

LEFT SIDE

EXTERIOR VIEW

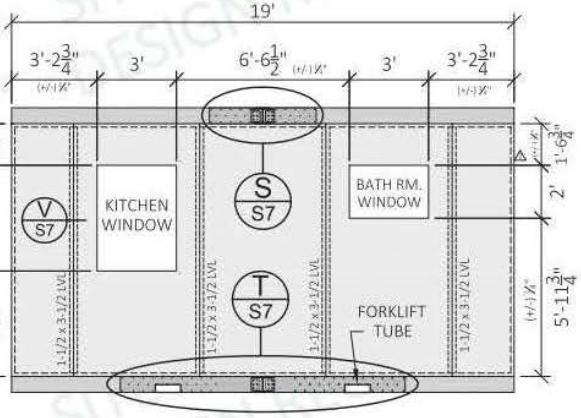

RIGHT SIDE

EXTERIOR VIEW

PRELIMINARY. SITE-SPECIFIC DESIGN REQ'D

DATE:	REV:	DESCRIPTION:
		DIM. TOLERANCE, ROOFING SLOPE & NEW DETAIL REFERENCES

PROPRIETARY AND CONFIDENTIAL

AS INSTRUMENTS OF SERVICE, THESE DRAWINGS SHALL REMAIN THE PROPERTY OF SIP ENGINEERING CONSULTANTS, LLC WHO SHALL RETAIN ALL COMMON LAW, STATUTORY & OTHER RESERVED RIGHTS, INCLUDING COPYRIGHTS. REPRODUCTION IS PROHIBITED WITHOUT THE EXPRESSED WRITTEN PERMISSION OF SIP ENGINEERING CONSULTANTS, LLC.

SIP Engineering Consultants, LLC

14712 SW Murray Scholls Dr.
328
Beaverton, OR 97007
Mike@SIPconsultants.com
Phone: 503-564-4178

UNITS:	FT-IN
SHEET FORMAT:	ARCH C
SHEET SCALE:	NONE
CREATED BY:	MN
RELEASE DATE:	11/03/2023
SHEET:	S2

MODEL: 2 DOOR CASITA

MODEL #: BXB-000009

ARIZONA

BOXABL INC.
5345 EAST NORTH BELT ROAD
NORTH LAS VEGAS, NV 89115, USA
+1(702) 500-9000 HELLO@BOXABL.COM

STEMWALL
FOOTING OPTION
(DESIGNED BY OTHERS)

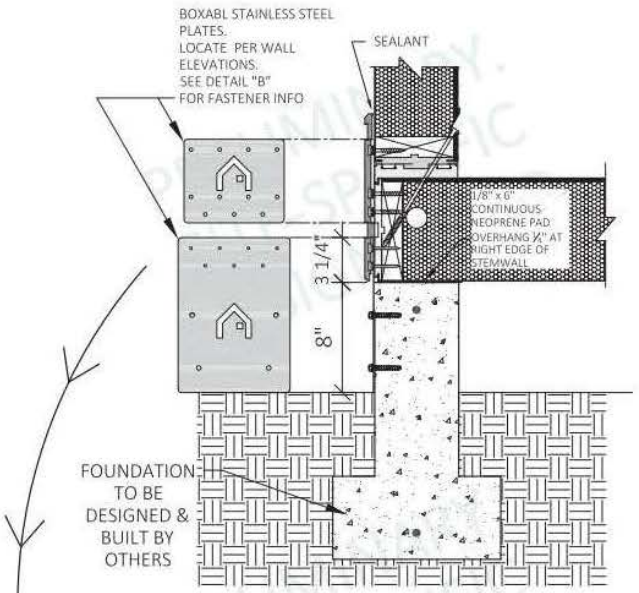

A PERIMETER FLOOR EDGE

SCALE: NONE

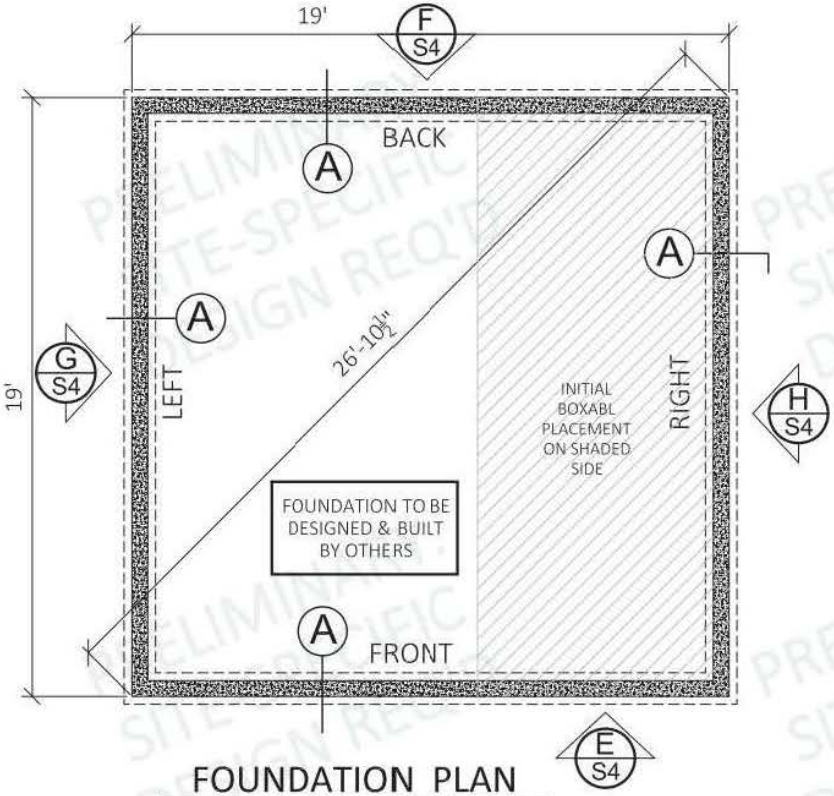

FOUNDATION PLAN

NOTES:

TOP SURFACE OF CONCRETE STEMWALL SHALL BE FLAT AND LEVEL TO WITHIN ⅛" BETWEEN ANY TWO POINTS AROUND THE PERIMETER.

PERIMETER & DIAGONAL DIMENSIONS HAVE NO MARGIN FOR ERROR FOR ANCHORAGE HARDWARE TO WORK AS INTENDED.

CONCRETE TO HAVE A MIN. 28 DAY COMPRESSIVE STRENGTH, f'c = 2,500 psi.

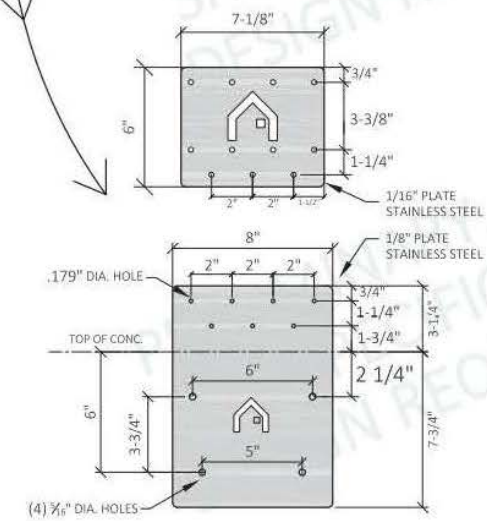

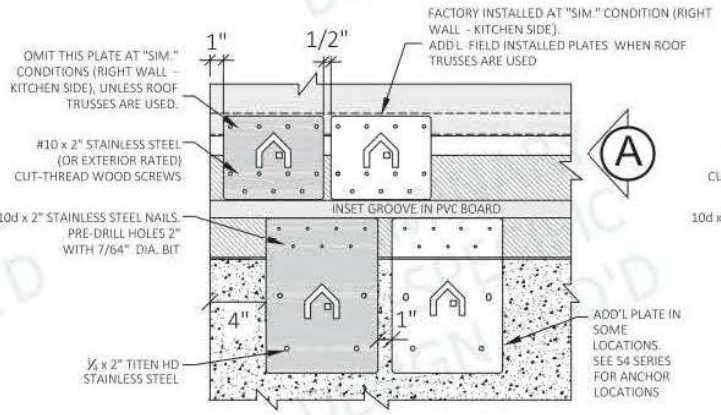

B HOLD-DOWN'S AT LEFT & RIGHT WALL

SEE S4 SERIES FOR MORE LOCATIONS

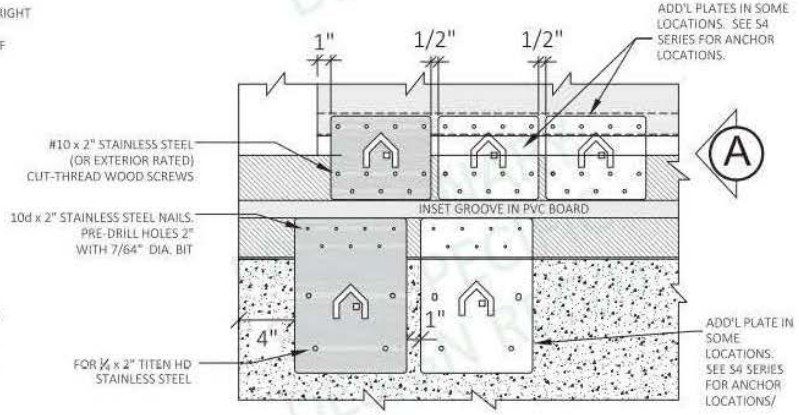

C HOLD-DOWN'S AT FRONT & BACK WALL

SEE S4 SERIES FOR MORE LOCATIONS

DATE:	REV:	DESCRIPTION:

PROPRIETARY AND CONFIDENTIAL

AS INSTRUMENTS OF SERVICE, THESE DRAWINGS SHALL REMAIN THE PROPERTY OF SIP ENGINEERING CONSULTANTS, LLC WHO SHALL RETAIN ALL COMMON LAW, STATUTORY & OTHER RESERVED RIGHTS, INCLUDING COPYRIGHTS. REPRODUCTION IS PROHIBITED WITHOUT THE EXPRESSED WRITTEN PERMISSION OF SIP ENGINEERING CONSULTANTS, LLC.

SIP Engineering Consultants, LLC

14712 SW Murray Scholls Dr.
328
Beaverton, OR 97007
Mike@SIPconsultants.com
Phone: 503-564-4178

UNITS:	FT-IN
SHEET FORMAT:	ARCH C
SHEET SCALE:	NONE
CREATED BY:	MN
RELEASE DATE:	11/03/2023
SHEET:	S3

MODEL: 2 DOOR CASITA

MODEL #: BXB-000009

ARIZONA

BOXABL INC.
5345 EAST NORTH BELT ROAD
NORTH LAS VEGAS, NV 89115, USA
+1(702) 500-9000 HELLO@BOXABL.COM

BOXABL

CONCRETE SLAB
FOUNDATION OPTION
(DESIGNED BY OTHERS)

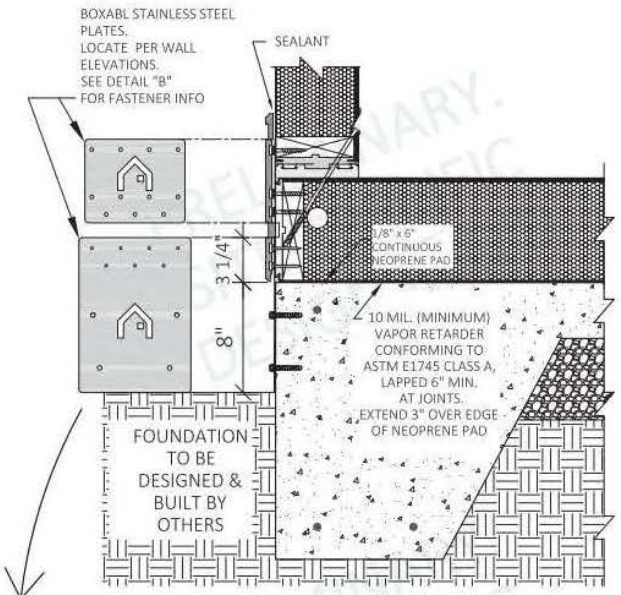

A PERIMETER FLOOR EDGE
SCALE: NONE

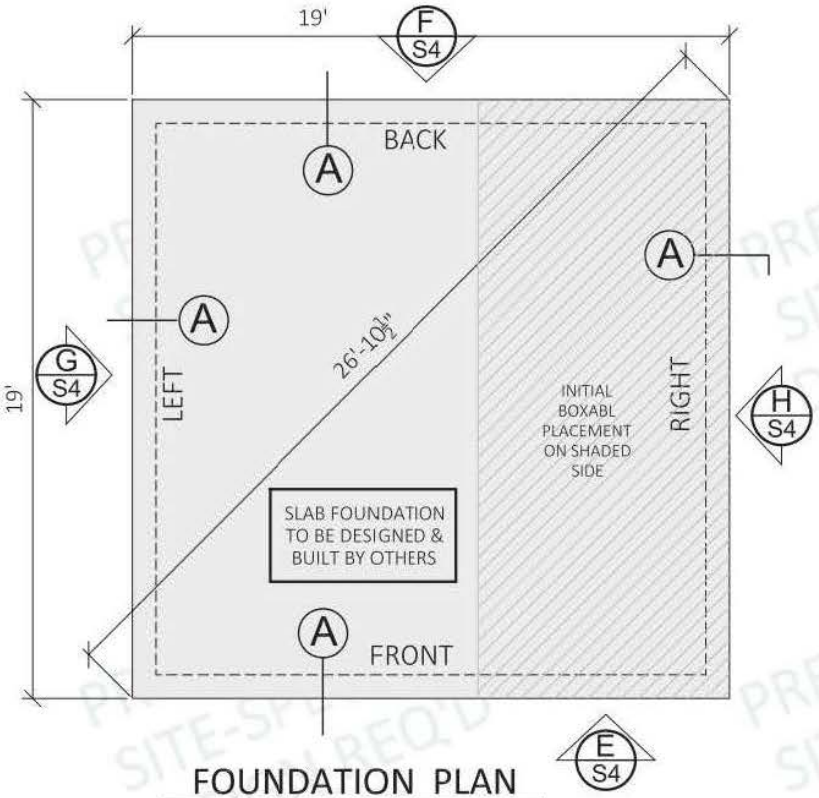

FOUNDATION PLAN

NOTES:

TOP SURFACE OF THE CONCRETE SHALL BE FLAT AND LEVEL TO WITHIN ⅛" BETWEEN ANY TWO POINTS AROUND THE PERIMETER.

PERIMETER & DIAGONAL DIMENSIONS HAVE NO MARGIN FOR ERROR FOR ANCHORAGE HARDWARE TO WORK AS INTENDED.

CONCRETE TO HAVE A MIN. 28 DAY COMPRESSIVE STRENGTH, f'c = 2,500 psi.

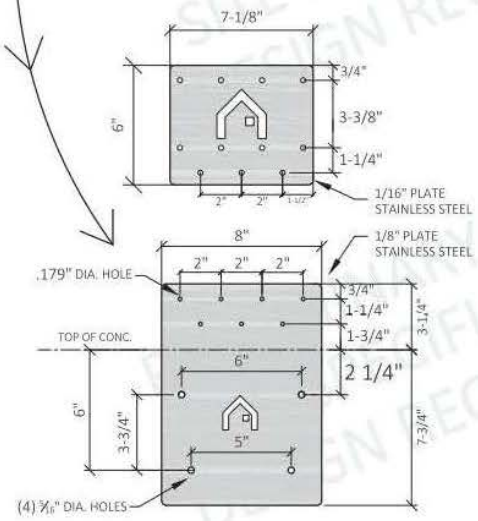

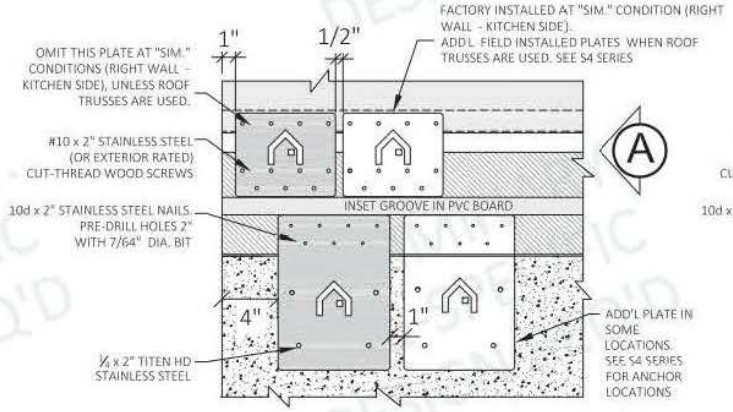

B HOLD-DOWN'S AT LEFT & RIGHT WALL
SEE S4 SERIES FOR MORE LOCATIONS

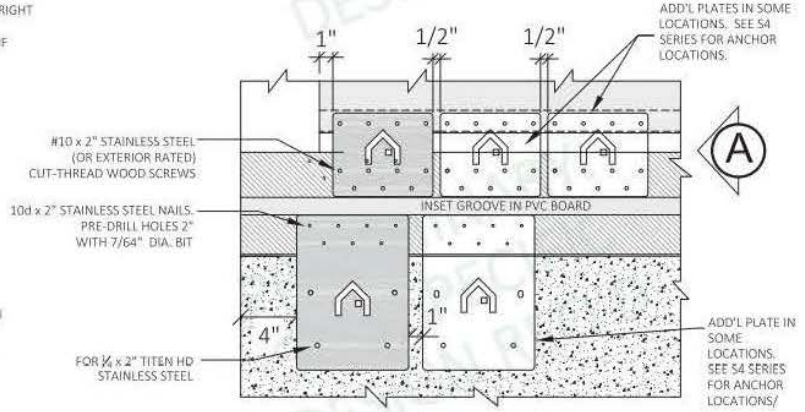

C HOLD-DOWN'S AT FRONT & BACK WALL
SEE S4 SERIES FOR MORE LOCATIONS

DATE:	REV:	DESCRIPTION:

PROPRIETARY AND CONFIDENTIAL
AS INSTRUMENTS OF SERVICE, THESE DRAWINGS SHALL REMAIN THE PROPERTY OF SIP ENGINEERING CONSULTANTS, LLC WHO SHALL RETAIN ALL COMMON LAW, STATUTORY & OTHER RESERVED RIGHTS, INCLUDING COPYRIGHTS. REPRODUCTION IS PROHIBITED WITHOUT THE EXPRESSED WRITTEN PERMISSION OF SIP ENGINEERING CONSULTANTS, LLC.

SIP Engineering Consultants, LLC
14712 SW Murray Scholls Dr. # 328
Beaverton, OR 97007
Mike@SIPconsultants.com
Phone: 503-564-4178

UNITS:	FT-IN
SHEET FORMAT:	ARCH C
SHEET SCALE:	NONE
CREATED BY:	MN
RELEASE DATE:	11/3/2023
SHEET:	S3.1

MODEL: 2 DOOR CASITA
MODEL #: BXB-000009
ARIZONA

BOXABL INC.
5345 EAST NORTH BELT ROAD
NORTH LAS VEGAS, NV 89115, USA
+1(702) 500-9000 HELLO@BOXABL.COM

BOXABL

CONCRETE PIER & WOOD BEAM FOUNDATION OPTION

(DESIGNED BY OTHERS)

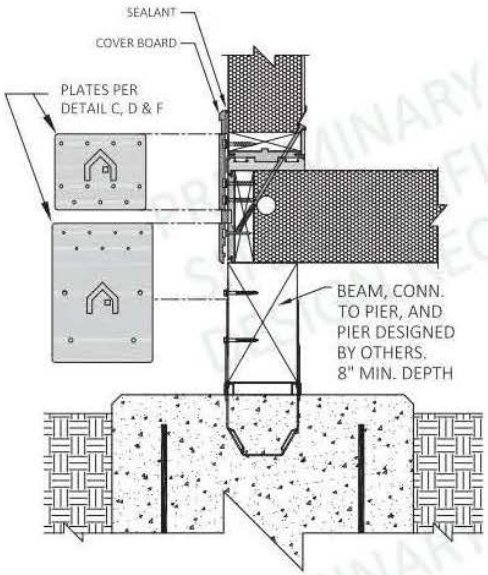

A TYPICAL PERIMETER PIER

SCALE: NONE

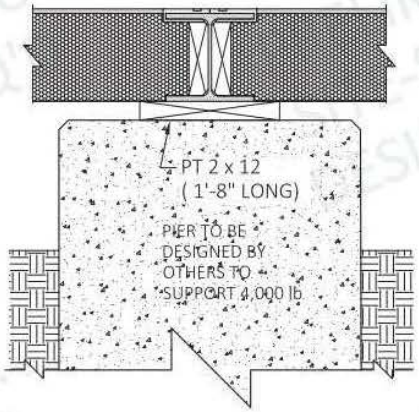

B INTERIOR FOOTING

SCALE: NONE

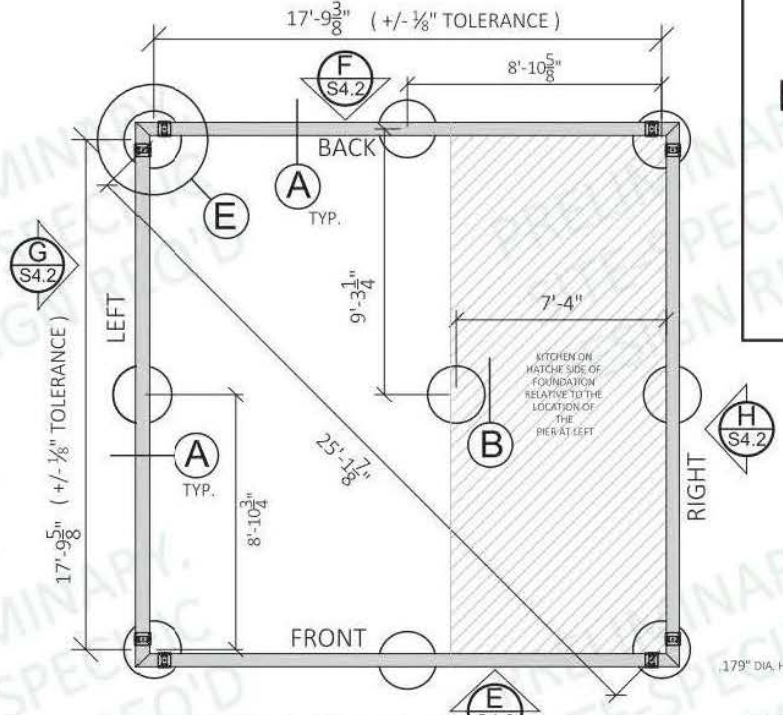

FOUNDATION PLAN

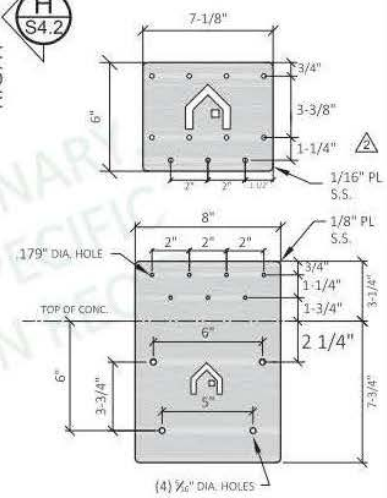

F

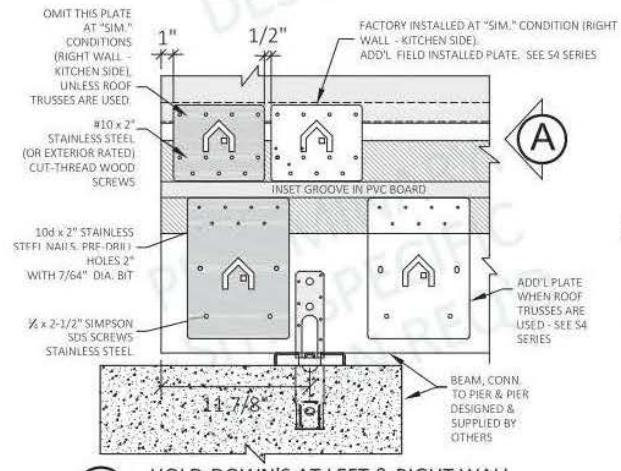

C HOLD-DOWN'S AT LEFT & RIGHT WALL

SEE S4 SERIES FOR LOCATIONS

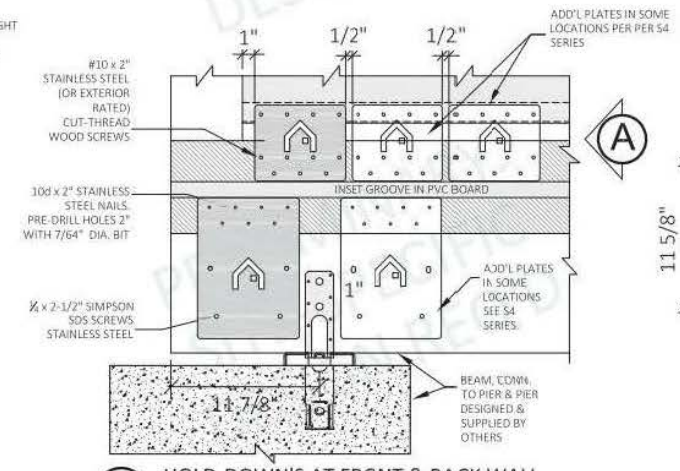

D HOLD-DOWN'S AT FRONT & BACK WALL

SEE S4 SERIES FOR LOCATIONS

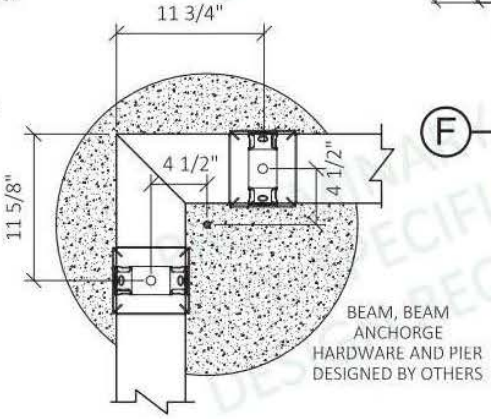

E CORNER PIERS

SCALE: NONE

DATE:	REV:	DESCRIPTION:

PROPRIETARY AND CONFIDENTIAL

AS INSTRUMENTS OF SERVICE, THESE DRAWINGS SHALL REMAIN THE PROPERTY OF SIP ENGINEERING CONSULTANTS, LLC WHO SHALL RETAIN ALL COMMON LAW, STATUTORY & OTHER RESERVED RIGHTS, INCLUDING COPYRIGHTS. REPRODUCTION IS PROHIBITED WITHOUT THE EXPRESSED WRITTEN PERMISSION OF SIP ENGINEERING CONSULTANTS, LLC.

SIP Engineering Consultants, LLC

14712 SW Murray Scholls Dr.
328
Beaverton, OR 97007
Mike@SIPconsultants.com
Phone: 503-564-4178

UNITS:	FT-IN
SHEET FORMAT:	ARCH C
SHEET SCALE:	NONE
CREATED BY:	MN
RELEASE DATE:	11/3/2023
SHEET:	S3.2

MODEL: 2 DOOR CASITA

MODEL #: BXB-000009

ARIZONA

BOXABL INC.
5345 EAST NORTH BELT ROAD
NORTH LAS VEGAS, NV 89115, USA
+1(702) 500-9000 HELLO@BOXABL.COM

PRELIMINARY. SITE-SPECIFIC DESIGN REQ'D

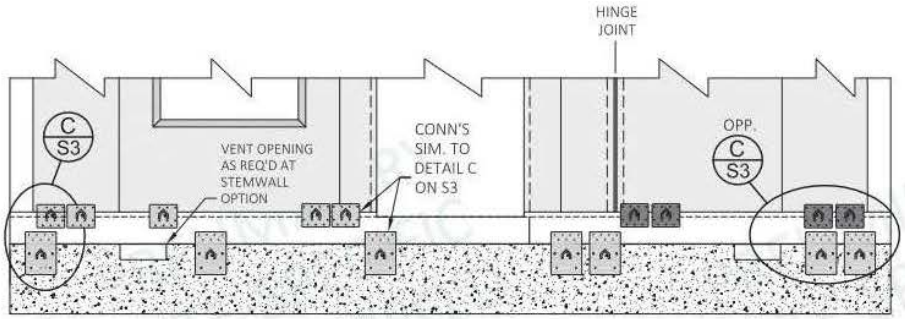

E FRONT WALL

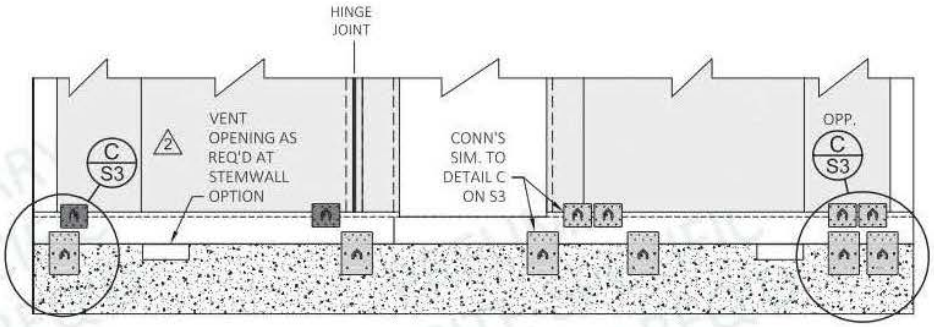

F BACK WALL

ANCHOR PLATE LOCATIONS SHOWN REQUIRE ADJUSTMENT FOR SITE-SPECIFIC CONDITIONS AND USE OF ROOF TRUSSES, IF USED.

FACTORY INSTALLED BOXABL PLATES (FIELD INSTALL IF ANY ARE MISSING)

FIELD INSTALLED BOXABL PLATES

CONCRETE FOUNDATION OPTION

DESIGNED & BUILT BY OTHERS

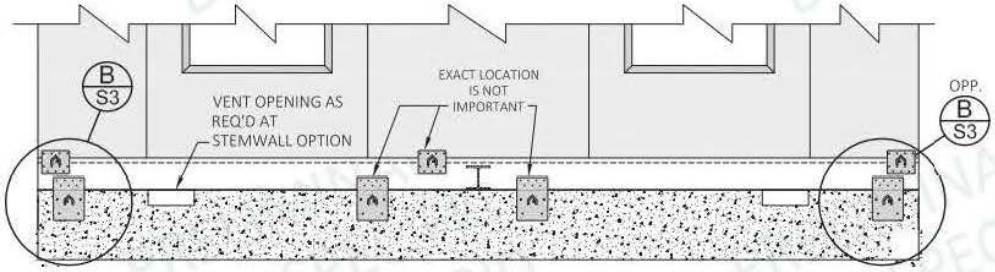

G LEFT WALL

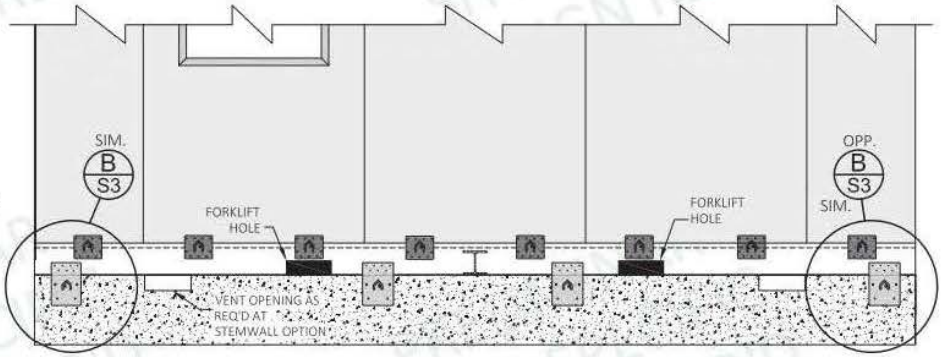

H RIGHT WALL

KITCHEN SIDE

DATE:	REV:	DESCRIPTION:

PROPRIETARY AND CONFIDENTIAL

AS INSTRUMENTS OF SERVICE, THESE DRAWINGS SHALL REMAIN THE PROPERTY OF SIP ENGINEERING CONSULTANTS, LLC WHO SHALL RETAIN ALL COMMON LAW, STATUTORY & OTHER RESERVED RIGHTS, INCLUDING COPYRIGHTS. REPRODUCTION IS PROHIBITED WITHOUT THE EXPRESSED WRITTEN PERMISSION OF SIP ENGINEERING CONSULTANTS, LLC.

SIP Engineering Consultants, LLC

14712 SW Murray Scholls Dr.
328
Beaverton, OR 97007
Mike@SIFconsultants.com
Phone: 503-564-4178

UNITS:	FT-IN
SHEET FORMAT:	ARCH C
SHEET SCALE:	NONE
CREATED BY:	MN
RELEASE DATE:	11/3/2023
SHEET:	S4

MODEL: 2 DOOR CASITA

MODEL #: BXB-000009

ARIZONA

BOXABL INC.
5345 EAST NORTH BELT ROAD
NORTH LAS VEGAS, NV 89115, USA
+1(702) 500-9000 HELLO@BOXABL.COM

BOXABL

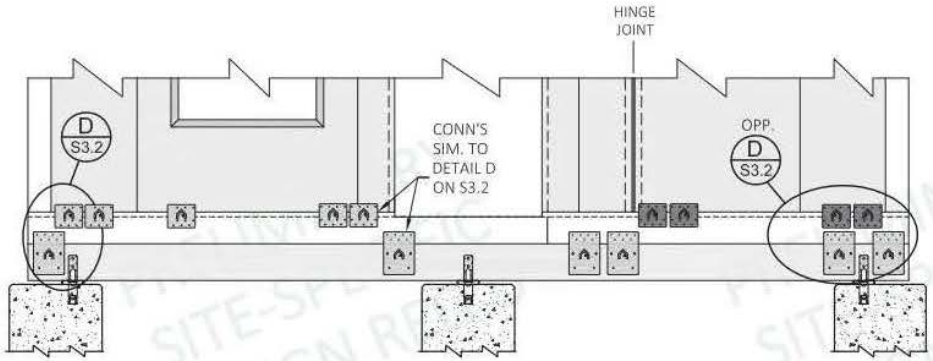

E FRONT WALL

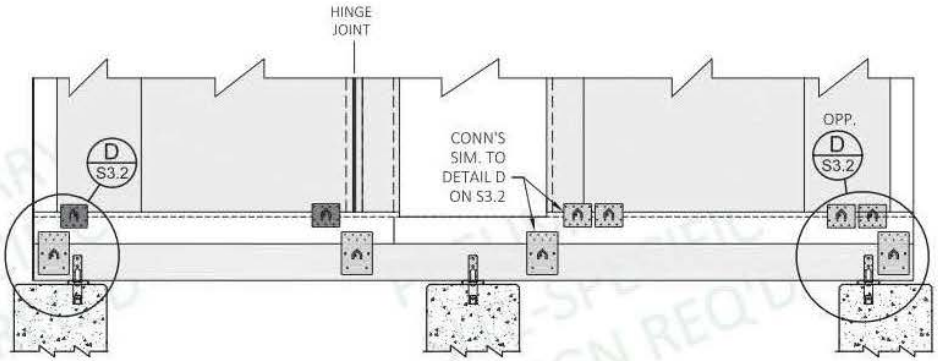

F BACK WALL

CONCRETE PIER & BEAM OPTION
DESIGNED & BUILT BY OTHERS

FACTORY INSTALLED BOXABL PLATES (FIELD INSTALL IF ANY ARE MISSING)

FIELD INSTALLED BOXABL PLATES

ANCHOR PLATE LOCATIONS SHOWN REQUIRE ADJUSTMENT FOR SITE-SPECIFIC CONDITIONS AND USE OF ROOF TRUSSES, IF USED.

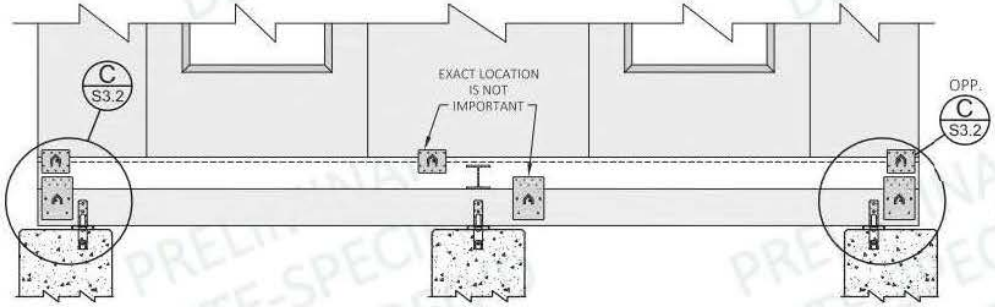

G LEFT WALL

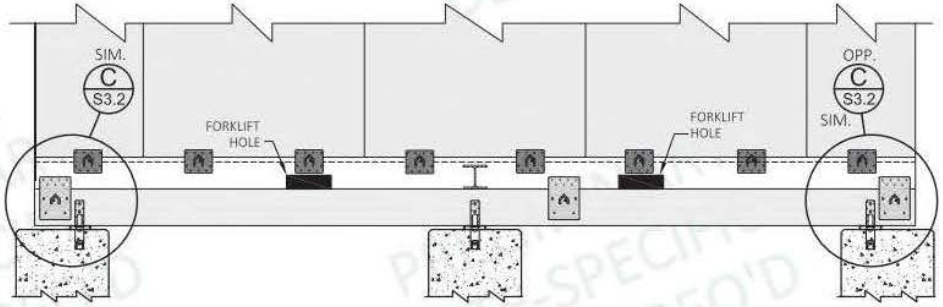

H RIGHT WALL

KITCHEN SIDE

PRELIMINARY SITE-SPECIFIC DESIGN REQ'D

DATE:	REV:	DESCRIPTION:

PROPRIETARY AND CONFIDENTIAL
AS INSTRUMENTS OF SERVICE, THESE DRAWINGS SHALL REMAIN THE PROPERTY OF SIP ENGINEERING CONSULTANTS, LLC WHO SHALL RETAIN ALL COMMON LAW, STATUTORY & OTHER RESERVED RIGHTS, INCLUDING COPYRIGHTS. REPRODUCTION IS PROHIBITED WITHOUT THE EXPRESSED WRITTEN PERMISSION OF SIP ENGINEERING CONSULTANTS, LLC.

SIP Engineering Consultants, LLC
14712 SW Murray Scholls Dr. # 328
Beaverton, OR 97007
Mike@SIPconsultants.com
Phone: 503-564-4178

UNITS:	FT-IN
SHEET FORMAT:	ARCH C
SHEET SCALE:	NONE
CREATED BY:	MN
RELEASE DATE:	11/03/2023
SHEET:	S4.1

MODEL: 2 DOOR CASITA

MODEL #: BXB-000009

ARIZONA

BOXABL INC.
5345 EAST NORTH BELT ROAD
NORTH LAS VEGAS, NV 89115, USA
+1(702) 500-9000 HELLO@BOXABL.COM

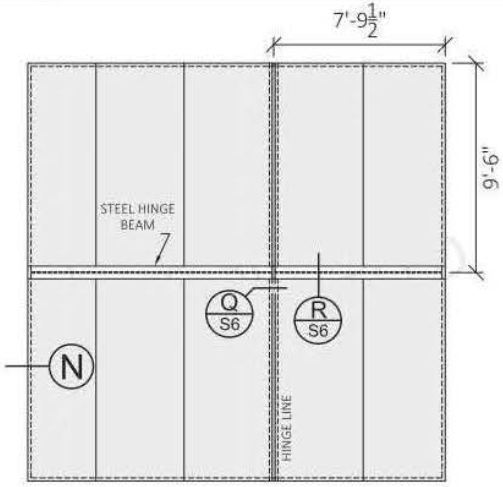

FLOOR PANEL LAYOUT

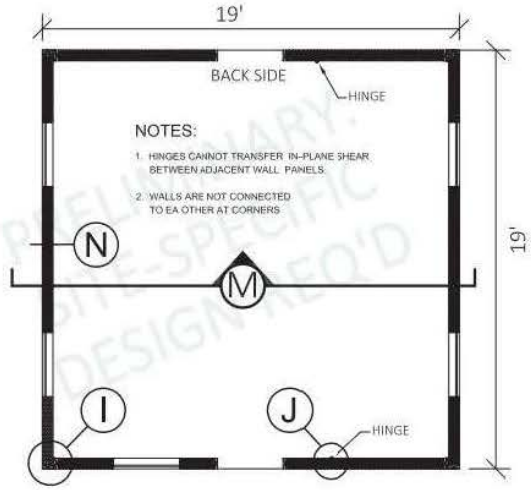

WALL PLAN

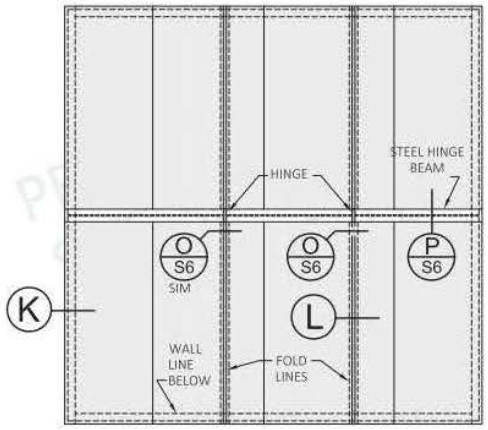

ROOF PANEL LAYOUT

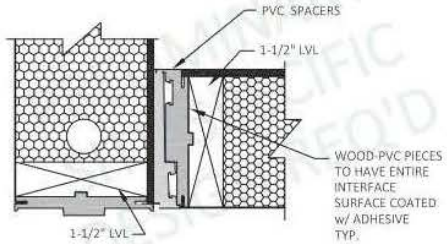

I WALL CORNER CONN.

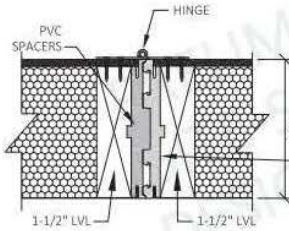

J WALL HINGE CONN.

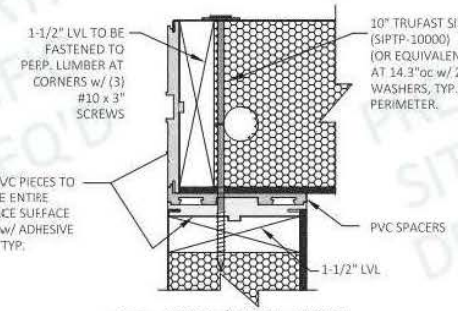

K ROOF / WALL CONN.

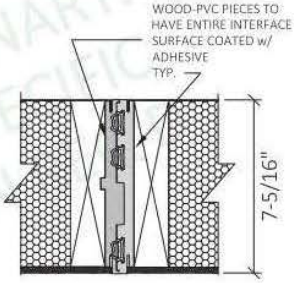

L ROOF JOINT AT FOLD LINE

ROOF, WALL & FLOOR MATERIALS:

EMBEDED LUMBER TO BE LAMINATED VENEER LUMBER (LVL), GRADE 2.0E, Fb = 2,600 psf MIN.

24 GA. STEEL OUTER SKIN: ASTM A1003 STRUCTURAL GRADE 33 (GRADE 230) TYPE H.

EPS CORE: 1 pcf DENSITY

INNER SKIN: ¼" MGO (MADE w/o SOREL CEMENT)

ALL STRUCTURAL INSULATED PANELS TO BE TESTED ACCORDING TO THE APPROVED JUNE 2019 (EDITORIALLY REVISED DECEMBER 2020) VERSION OF ACCEPTANCE CRITERIA ICC-ES AC04 INCLUDING, BUT NOT LIMITED TO:
ASTM E72
ASTM E136-04
ASTM E119-08a
ASTM E331
ASTM C393
ASTM C481

ALL LVL MEMBERS TO BE GLUED TO ADJACENT CONTACT SURFACES ON ALL FOUR SIDE.

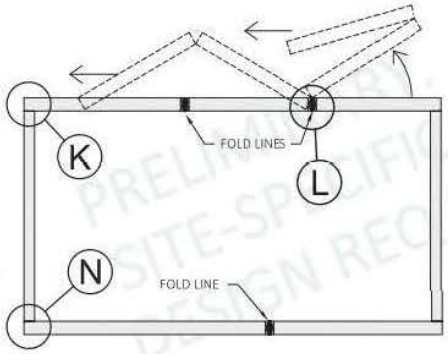

M SECTION

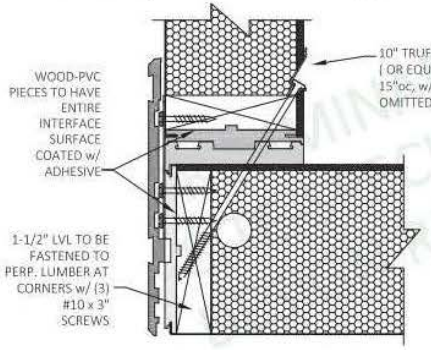

N FLOOR / WALL CONN.

PRELIMINARY. SITE-SPECIFIC DESIGN REQ'D

DATE:	REV:	DESCRIPTION:

PROPRIETARY AND CONFIDENTIAL
AS INSTRUMENTS OF SERVICE, THESE DRAWINGS SHALL REMAIN THE PROPERTY OF SIP ENGINEERING CONSULTANTS, LLC WHO SHALL RETAIN ALL COMMON LAW, STATUTORY & OTHER RESERVED RIGHTS, INCLUDING COPYRIGHTS. REPRODUCTION IS PROHIBITED WITHOUT THE EXPRESSED WRITTEN PERMISSION OF SIP ENGINEERING CONSULTANTS, LLC.

SIP Engineering Consultants, LLC
14712 SW Murray Scholls Dr. # 328
Beaverton, OR 97007
Mike@SIPconsultants.com
Phone: 503-564-4178

UNITS:	FT-IN
SHEET FORMAT:	ARCH C
SHEET SCALE:	NONE
CREATED BY:	MN
RELEASE DATE:	11/3/2023
SHEET:	S5

MODEL: 2 DOOR CASITA

MODEL #: BXB-000009

ARIZONA

BOXABL INC.
5345 EAST NORTH BELT ROAD
NORTH LAS VEGAS, NV 89115, USA
+1(702) 500-9000 HELLO@BOXABL.COM

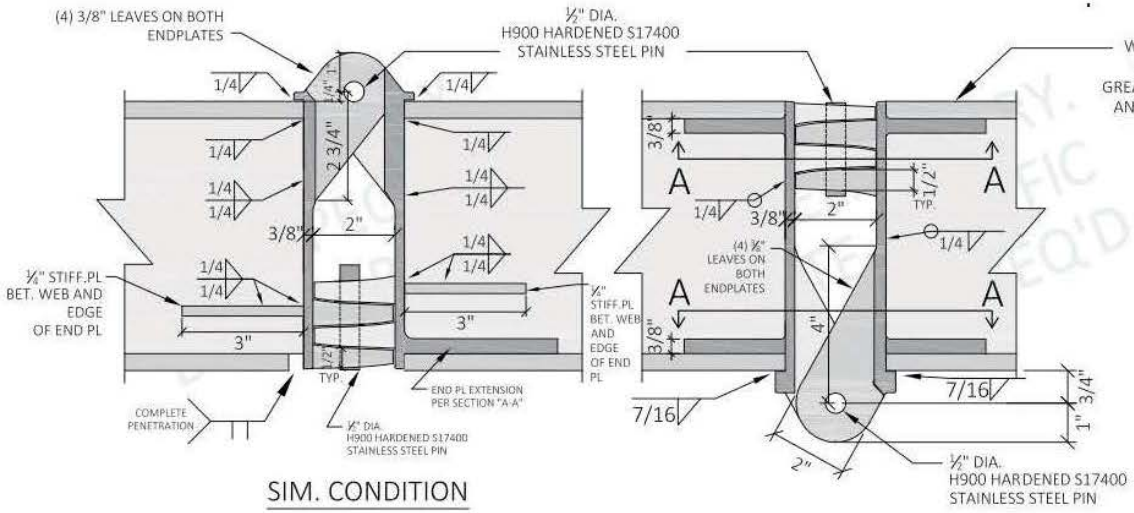

SIM. CONDITION

O ROOF BEAM HINGE CAST MONOLITHICALLY w/ END PLATES

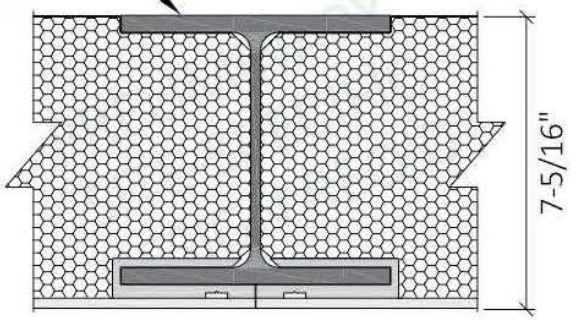

P ROOF HINGE BEAM

SCALE: NONE

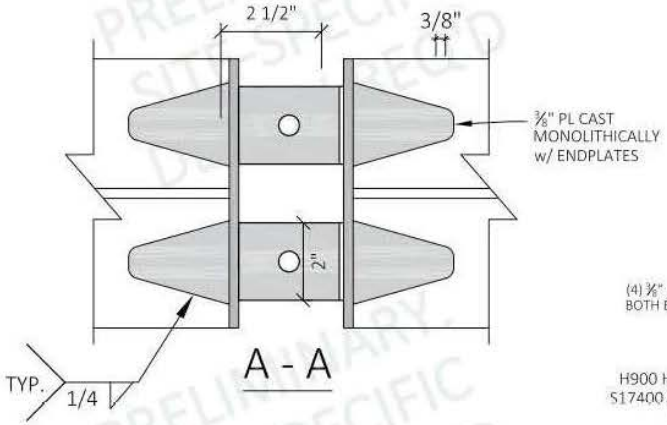

A - A

STEEL ELECTRODE SHALL CONFORM TO AWS 5.1, E70XX.

ALL WELDED CONNECTION SHALL BE WELDED ACCORDING TO THE "STRUCTURAL WELDING CODE - STEEL", AWS-D1.1, LATEST EDITION. WELDNG SHALL BE PERFORMED BY WELDERS CERTIFIED FOR THE WELDS TO BE MADE.

MATERIALS TO BE SUPPLIED BY CERTIFIED FABRICATORS.

STEEL MATERIAL PROPERTIES:

HINGE BEAM: ASTM A36
HINGE : ASTM A572 GR. 50
HINGE BEAM PINS: H900 HARDENED S17400 S.S.

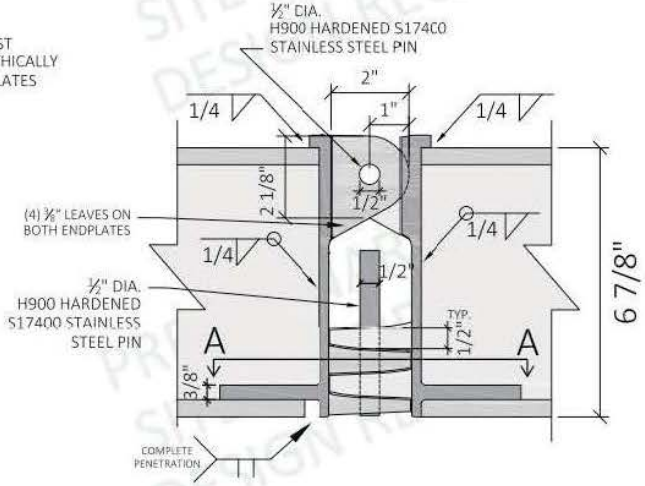

Q FLOOR HINGE CAST MONOLITHICALLY

SCALE: NONE

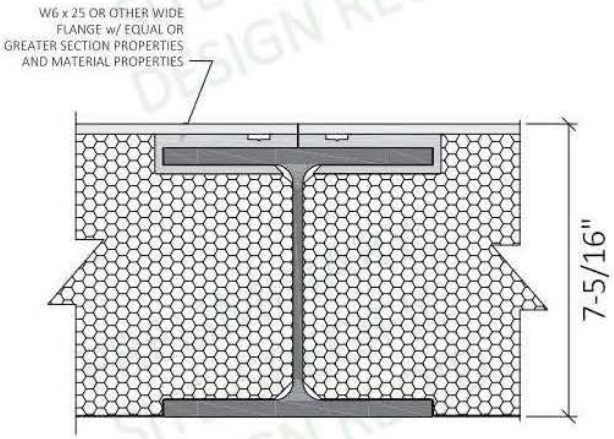

R FLOOR HINGE BEAM

SCALE: NONE

PRELIMINARY. SITE-SPECIFIC DESIGN REQ'D

DATE:	REV:	DESCRIPTION:

PROPRIETARY AND CONFIDENTIAL
AS INSTRUMENTS OF SERVICE, THESE DRAWINGS SHALL REMAIN THE PROPERTY OF SIP ENGINEERING CONSULTANTS, LLC WHO SHALL RETAIN ALL COMMON LAW, STATUTORY & OTHER RESERVED RIGHTS, INCLUDING COPYRIGHTS. REPRODUCTION IS PROHIBITED WITHOUT THE EXPRESSED WRITTEN PERMISSION OF SIP ENGINEERING CONSULTANTS, LLC.

SIP Engineering Consultants, LLC
14712 SW Murray Scholls Dr. # 328
Beaverton, OR 97007
Mike@SIPconsultants.com
Phone: 503-564-4178

UNITS:	FT-IN
SHEET FORMAT:	ARCH C
SHEET SCALE:	NONE
CREATED BY:	MN
RELEASE DATE:	11/3/2023
SHEET:	S6

MODEL: 2 DOOR CASITA

MODEL #: BXB-000009

ARIZONA

BOXABL INC.
5345 EAST NORTH BELT ROAD
NORTH LAS VEGAS, NV 89115, USA
+1(702) 500-9000 HELLO@BOXABL.COM

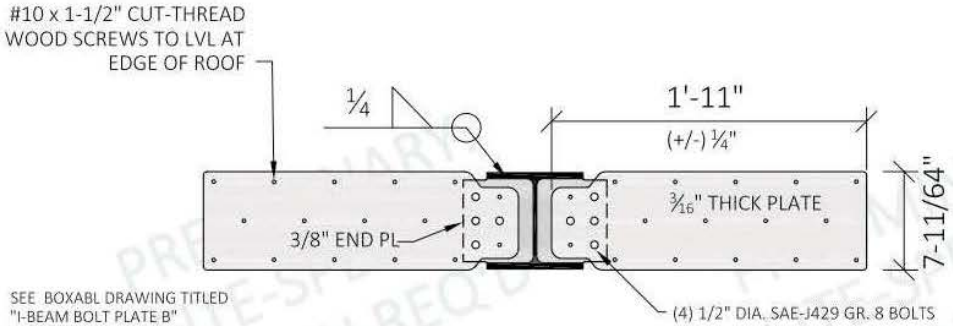

SEE BOXABL DRAWING TITLED "I-BEAM BOLT PLATE B" PART NO. P-STP-IBP-0005 FOR HOLE LOCATIION INFO. PART NO. P-STP-IBP-0005

S HINGE BEAM END PLATE

SCALE: NONE

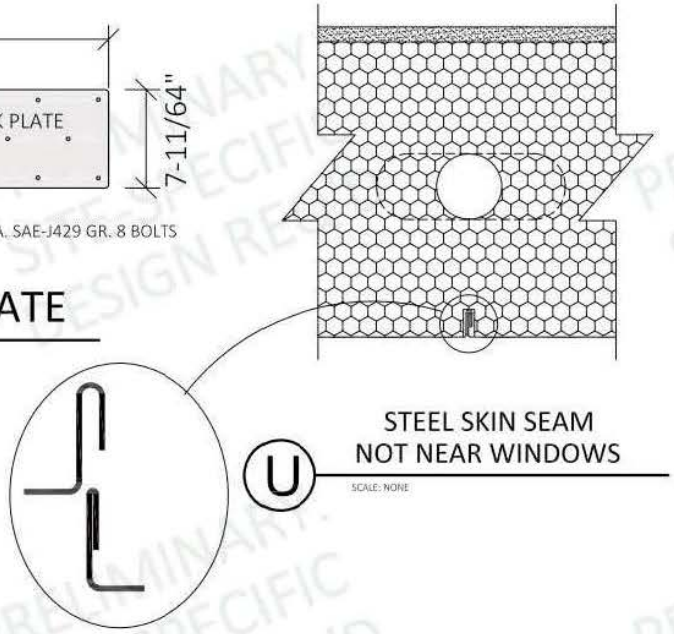

U STEEL SKIN SEAM NOT NEAR WINDOWS

SCALE: NONE

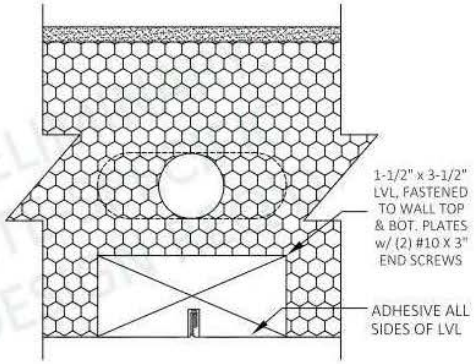

V STEEL SKIN SEAM NEAR SIDES OF WINDOWS

SCALE: NONE

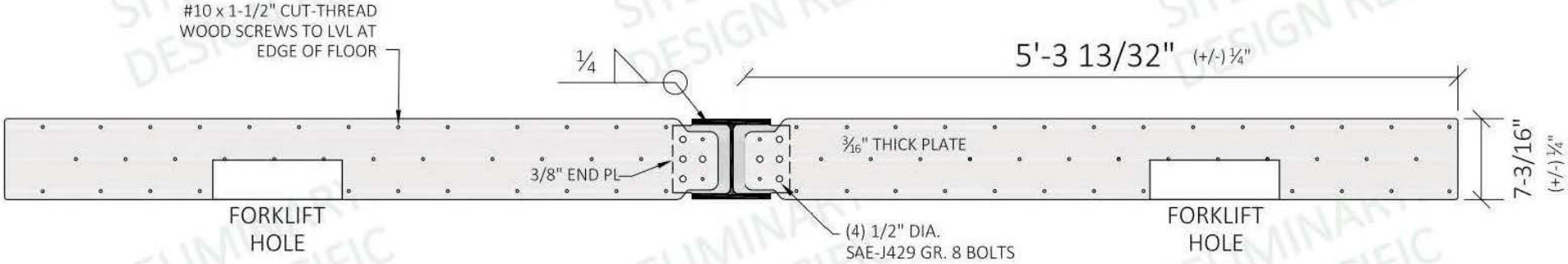

T FLOOR HINGE BEAM END PLATES AT RIGHT SIDE

SCALE: NONE

SEE BOXABL DRAWING TITLED "FORK TUBE PLATE A 1.2" PART NO. P-STP-FTP-0003 FOR HOLE LOCATIION INFO.

PRELIMINARY. SITE-SPECIFIC DESIGN REQ'D

DATE:	REV:	DESCRIPTION:

PROPRIETARY AND CONFIDENTIAL
AS INSTRUMENTS OF SERVICE, THESE DRAWINGS SHALL REMAIN THE PROPERTY OF SIP ENGINEERING CONSULTANTS, LLC WHO SHALL RETAIN ALL COMMON LAW, STATUTORY & OTHER RESERVED RIGHTS, INCLUDING COPYRIGHTS. REPRODUCTION IS PROHIBITED WITHOUT THE EXPRESSED WRITTEN PERMISSION OF SIP ENGINEERING CONSULTANTS, LLC.

SIP Engineering Consultants, LLC
14712 SW Murray Scholls Dr. # 328
Beaverton, OR 97007
Mike@SIPconsultants.com
Phone: 503-564-4178

UNITS:	FT-IN
SHEET FORMAT:	ARCH C
SHEET SCALE:	NONE
CREATED BY:	MN
RELEASE DATE:	11/3/2023
SHEET:	S7

MODEL: 2 DOOR CASITA

MODEL #: BXB-000009

ARIZONA

BOXABL INC.
5345 EAST NORTH BELT ROAD
NORTH LAS VEGAS, NV 89115, USA
+1(702) 500-9000 HELLO@BOXABL.COM